Knight RADIO

6A-127
6B-127
6C-127

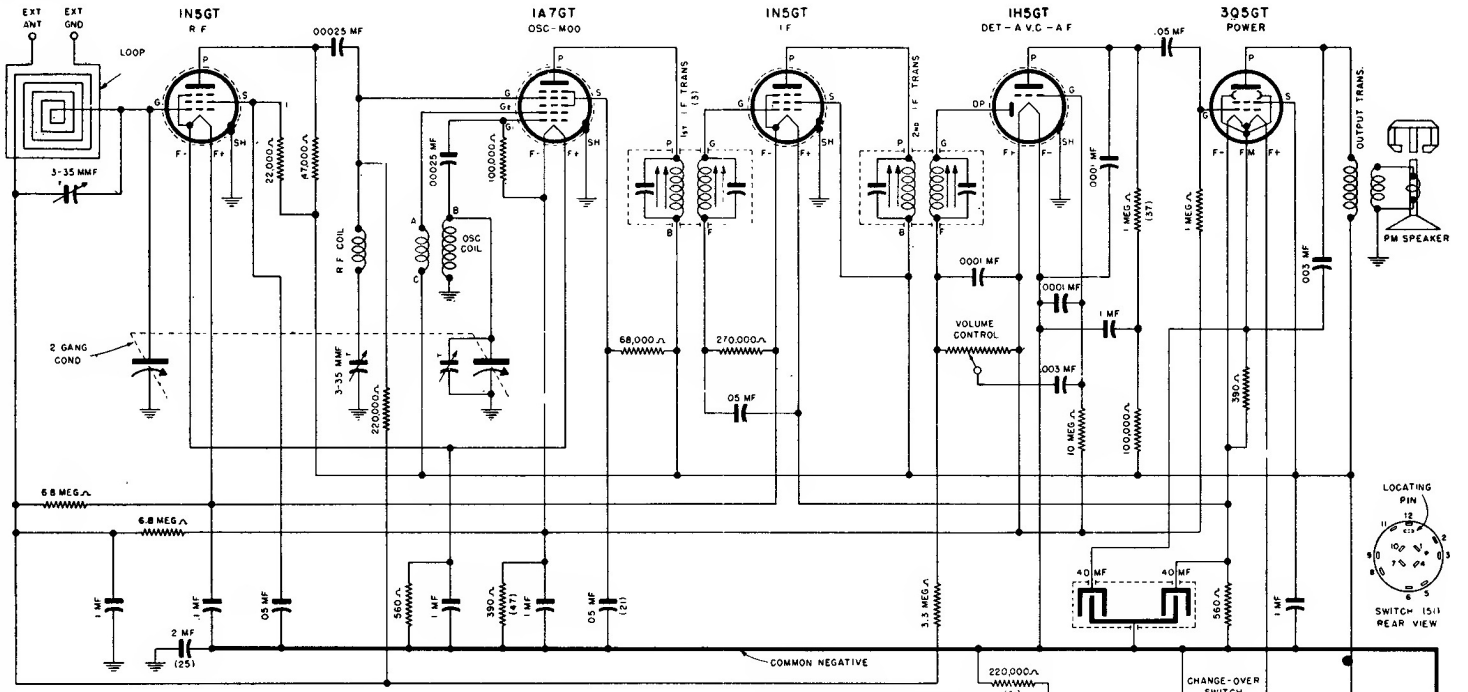

UNDERWRITERS APPROVED MODELS HAVE A COMMON NEGATIVE

NON-UNDERWRITERS APPROVED MODELS DO NOT HAVE PARTS 25, 41, AND 58 AND ALL CONNECTIONS TO THE COMMON NEGATIVE ARE GROUNDED DIRECTLY TO THE CHASSIS. BLACK AND YELLOW BATTERY LEADS ARE CONNECTED TO GROUND INSTEAD OF TO TERMINAL NO 9 ON CHANGE OVER SWITCH

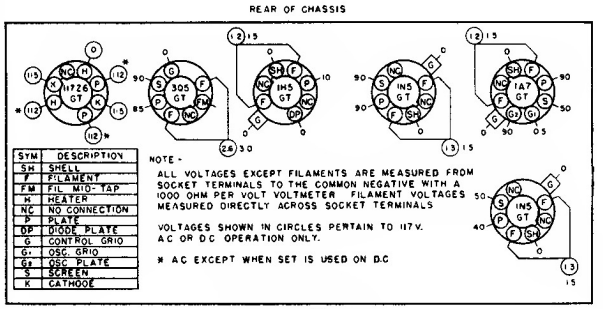

SYM	DESCRIPTION
SH	SHELL
F	FILAMENT
FM	FIL MID-TAP
H	HEATER
NC	NO CONNECTION
P	PLATE
DP	DIODE PLATE
G	CONTROL GRID
G1	OSC GRID
G2	OSC PLATE
S	SCREEN
K	CATHODE

NOTE -

ALL VOLTAGES EXCEPT FILAMENTS ARE MEASURED FROM SOCKET TERMINALS TO THE COMMON NEGATIVE WITH A 1000 OHM PER VOLT VOLTMETER. FILAMENT VOLTAGES MEASURED DIRECTLY ACROSS SOCKET TERMINALS

VOLTAGES SHOWN IN CIRCLES PERTAIN TO 117V. A.C. OR D.C. OPERATION ONLY.

* A.C. EXCEPT WHEN SET IS USED ON D.C.

VOLTAGE TABLE
(BOTTOM VIEW OF CHASSIS)

ALLIED RADIO CORPORATION