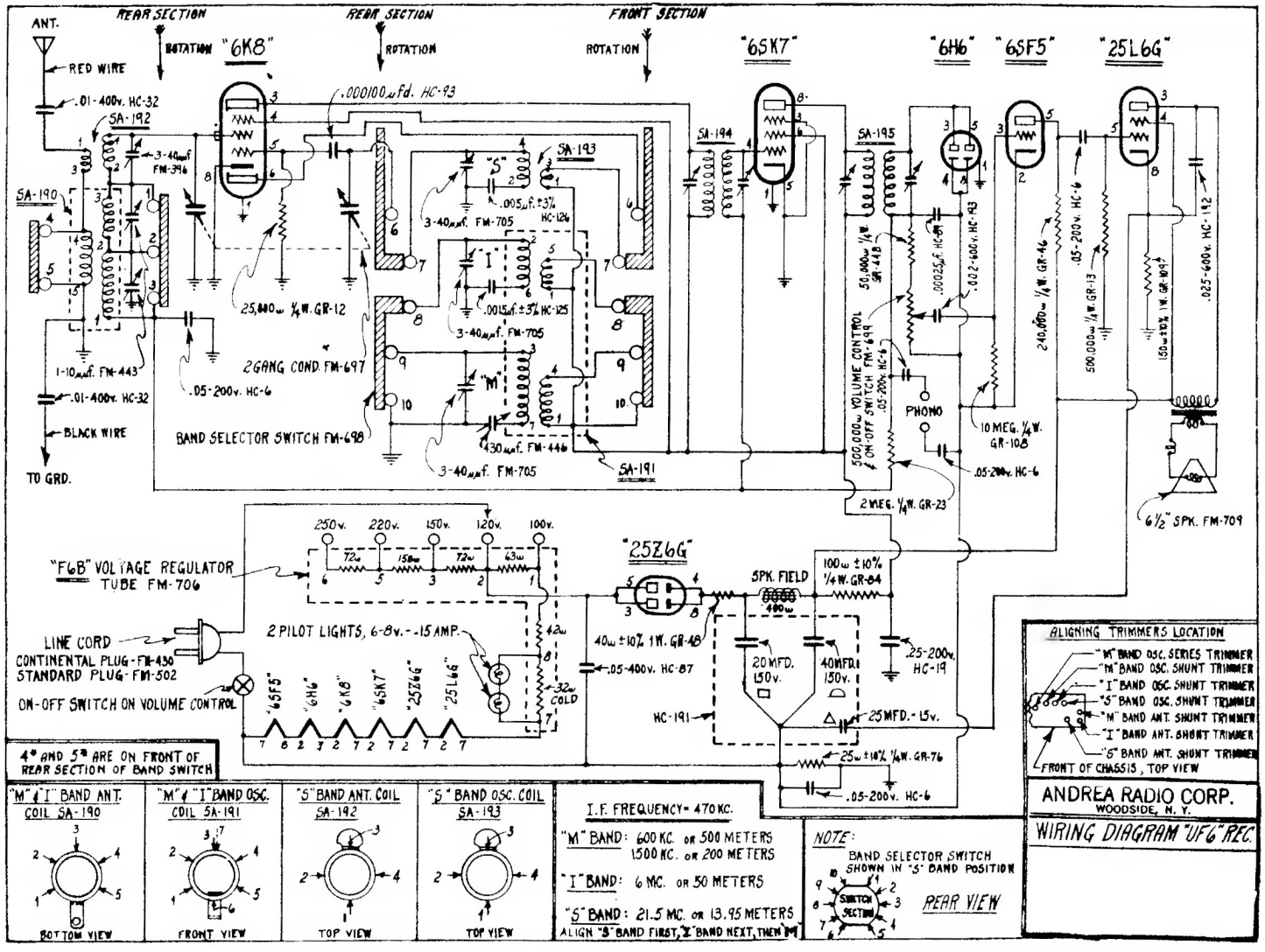

Andrea Radio