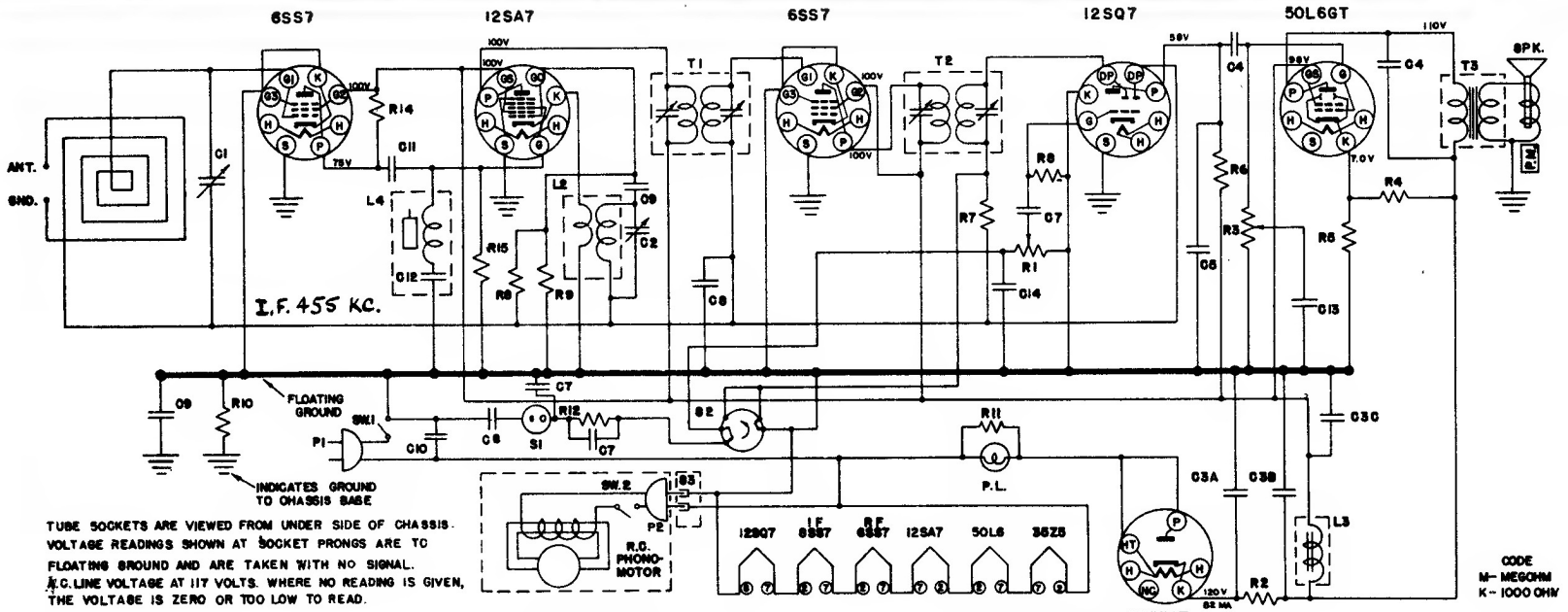

TUBE SOCKETS ARE VIEWED FROM UNDER SIDE OF CHASSIS. VOLTAGE READINGS SHOWN AT SOCKET PRONGS ARE TO FLOATING GROUND AND ARE TAKEN WITH NO SIGNAL. A.C. LINE VOLTAGE AT 117 VOLTS. WHERE NO READING IS GIVEN, THE VOLTAGE IS ZERO OR TOO LOW TO READ.

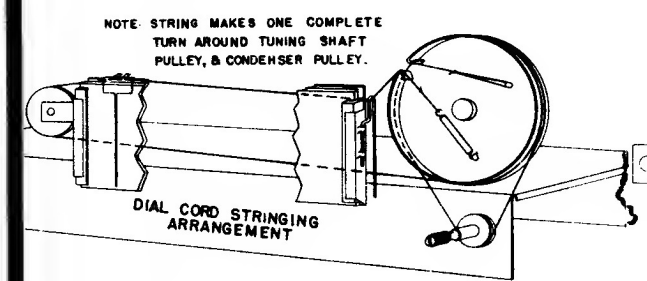

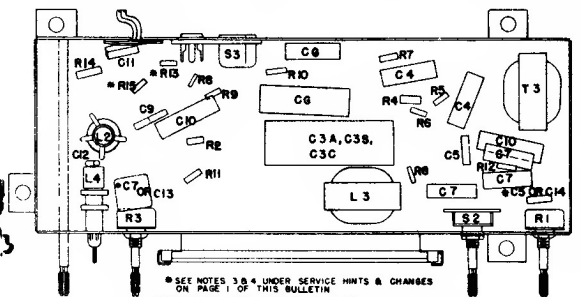

LOCATION OF PARTS UNDER CHASSIS

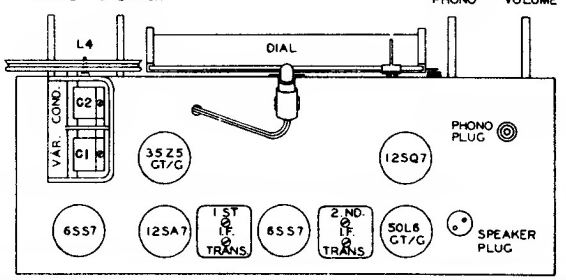

TUBE LAYOUT OUTLINE

ARVIN Model 665
Chassis RE-229
Noblitt-Sparks

REF. NO.	PART NO.	DESCRIPTION
R1	C19522	Volume Control - 1 meg.
R2	C20060-150	Resistor, 15 ohm
R3	C19946	Tone Control & Switch
R4	C20070-123	Resistor, 12,000 ohm - 1 W.
R5	C20060-151	Resistor, 150 ohm
R6	C20060-474	Resistor, .47 meg.
R7	C20060-225	Resistor, 2.2 meg.
R8	C20060-156	Resistor, 15 meg., ¼ W.
R9	C20060-223	Resistor, 22,000 ohm
R10	C20060-334	Resistor, 330,000 ohm
R11	C20060-331	Resistor, 330 ohm
R12	C20060-224	Resistor, .22 meg.
R13	C20060-105	Resistor, 1 megohm
R14	C20060-222	Resistor, 2200 ohm, ½ W.
R15	C20060-104	Resistor, 100,000 ohm, ½ W.
C1, C2	C19584	Var. Condenser, 2 gang
C3C		Elect. Cond., 40 uf, 150 V.
C3B	A19780	Elect. Cond., 20 uf, 150 V.
C3A		Elect. Cond., 10 uf, 150 V.
C4	C20068-103	Condenser, Paper, .01 uf, 400 V.
C5	C20065-501	Condenser, .0005 uf, 500 V.
C6	A19765	Condenser, .2 uf, 400 V.
C7	C20068-202	Condenser, Paper, .002 uf, 400 V.
C8	C20067-503	Condenser, .05 uf, 200 V.
C9	C20065-500	Condenser, Mica, .00005 uf, 500 V
C10	C20068-503	Condenser, .05 uf, 400 V.
C11	C20065-102	Condenser, Mica, .001 uf, 500 V.
C12	A21040	Condenser, .00003 uf, 500 V.
C13	C20068-502	Condenser, .005 uf., 400 V.
C14	C20065-251	Condenser, .00025 uf, 600 V.
L1	AE19943-1	Ant. Loop Assy.
L2	AC19586-1	Osc. Coil
L3	AC21073-1	Choke, Iron Core