Crosley Radio Corporation
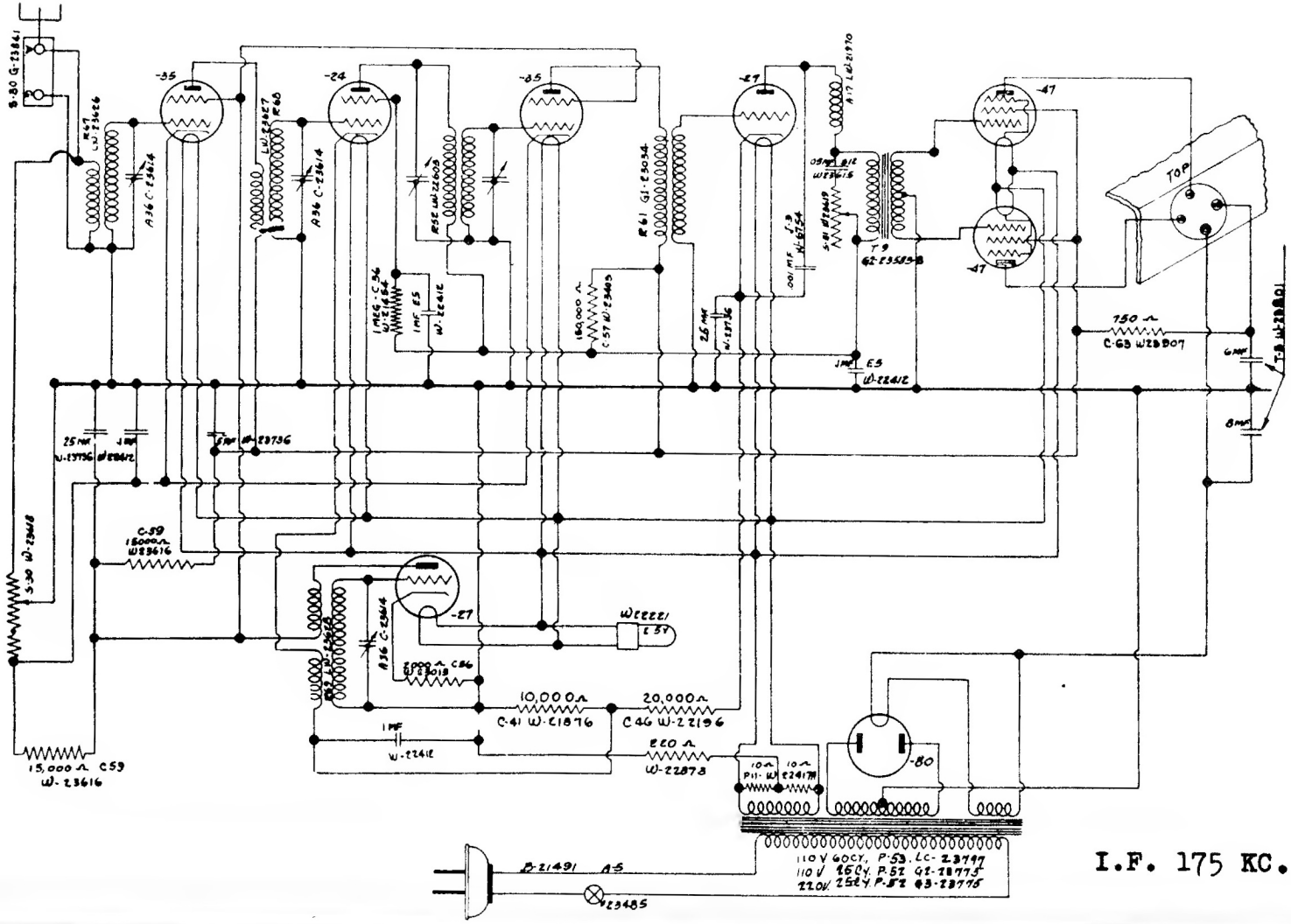
Model 124