CROSLEY MODEL 56FC

BAND CHANGE SWITCH SHOWN IN COUNTER-CLOCKWISE (BROADCAST) POSITION—VIEWED FROM SHAFT END.

455 KC I.F. FREQUENCY.

SCHEMATIC DIAGRAM—MODEL 56FC

SOCKET VOLTAGE CHART

1. THESE ARE BOTTOM VIEWS OF SOCKETS
2. MEASURE VOLTAGE FROM SOCKET LUG TO CHASSIS (GROUND).
3. THESE VOLTAGES MEASURED USING AN ELECTRONIC VOLTMETER.
4. WJ - WIRING JUNCTION.
5. NC - NO CONNECTION.
6. SOCKET VOLTAGE TOLERANCE, 10%.

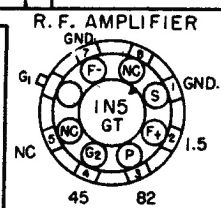

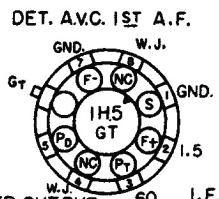

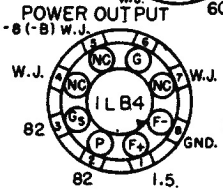

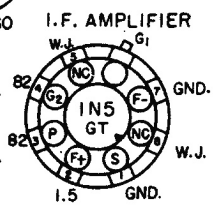

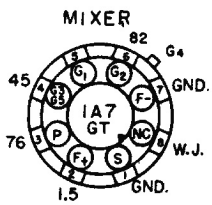

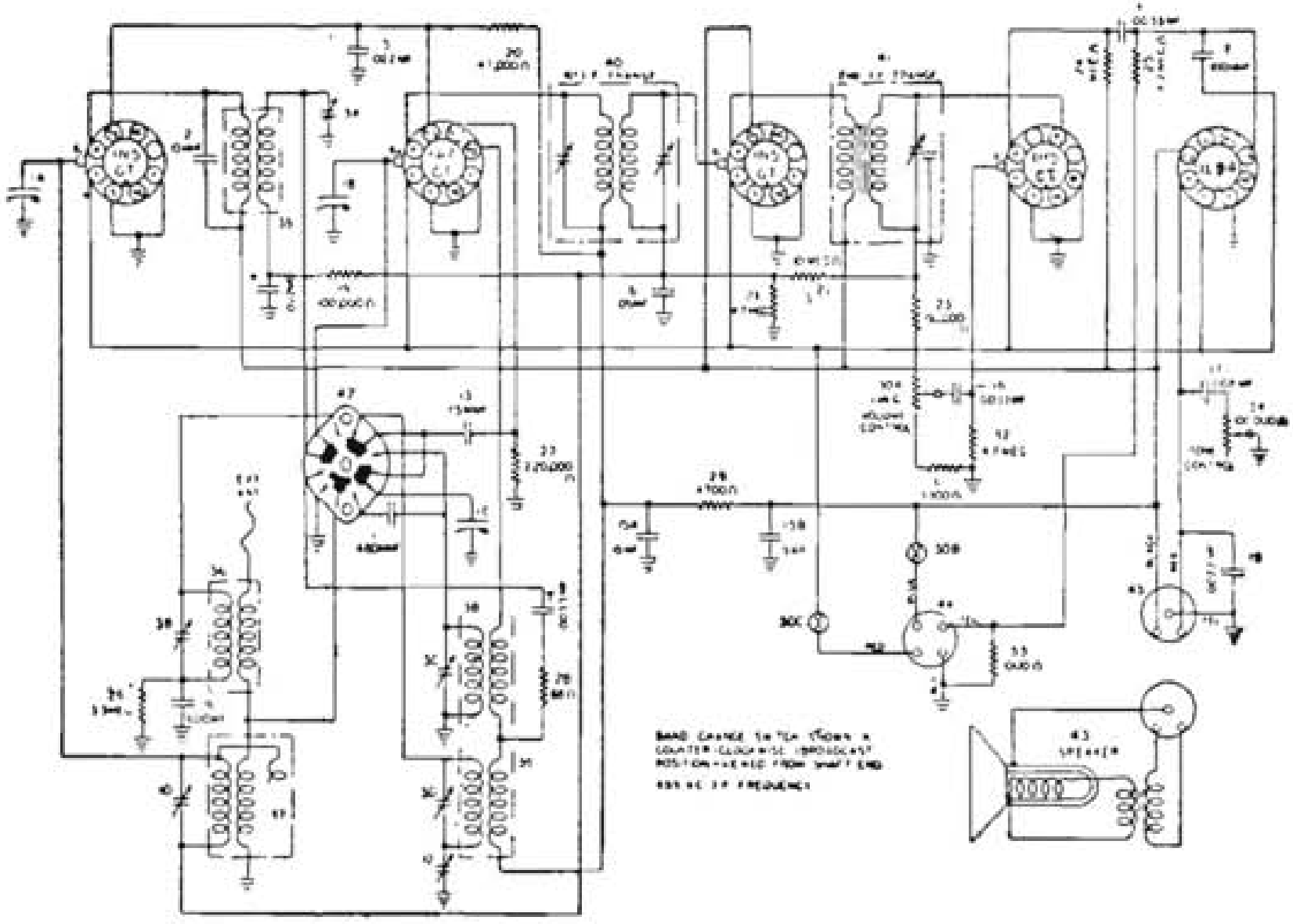

CROSLEY MOD. 56FC

Portatile a pile, con due gamme d'onda, inversore nella posizione OM, valvole GT.