CROSLEY ALIGNMENT PROCEDURE—MODEL 56TN

1. Turn the tuning condenser to the completely closed position against the stop and set the dial pointer to the reference line at the end of the dial scale.
2. Connect the output meter across the speaker voice coil.
3. The r.f. signal input from the signal generator should be connected to the external antenna lead. Connect the signal generator ground through a 0.1 mfd. condenser to —B (pin 3 on 12SK7 tube socket).
4. Turn the volume control on full and adjust the signal generator output to produce approximately mid-scale deflection of the output meter, but maintain signal generator output as low as possible to prevent AVC action in the receiver.

Alignment Sequence	Signal Generator Output			Position of		Adjust for Maximum Output
	Frequency in kc.	In Series with	To	Band Switch	Tuning Dial	
1	455	200 mmf.	Ant.	Left	1,620	A & B
2	15,300	400 ohms	Ant.	Right	15,300	C
3	15,000	400 ohms	Ant.	Right	15,000	D
4	1,400	200 mmf.	Ant.	Left	1,400	E & F

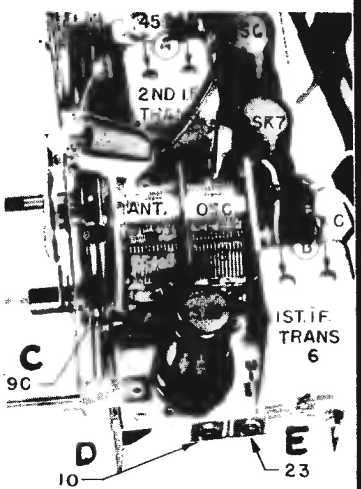
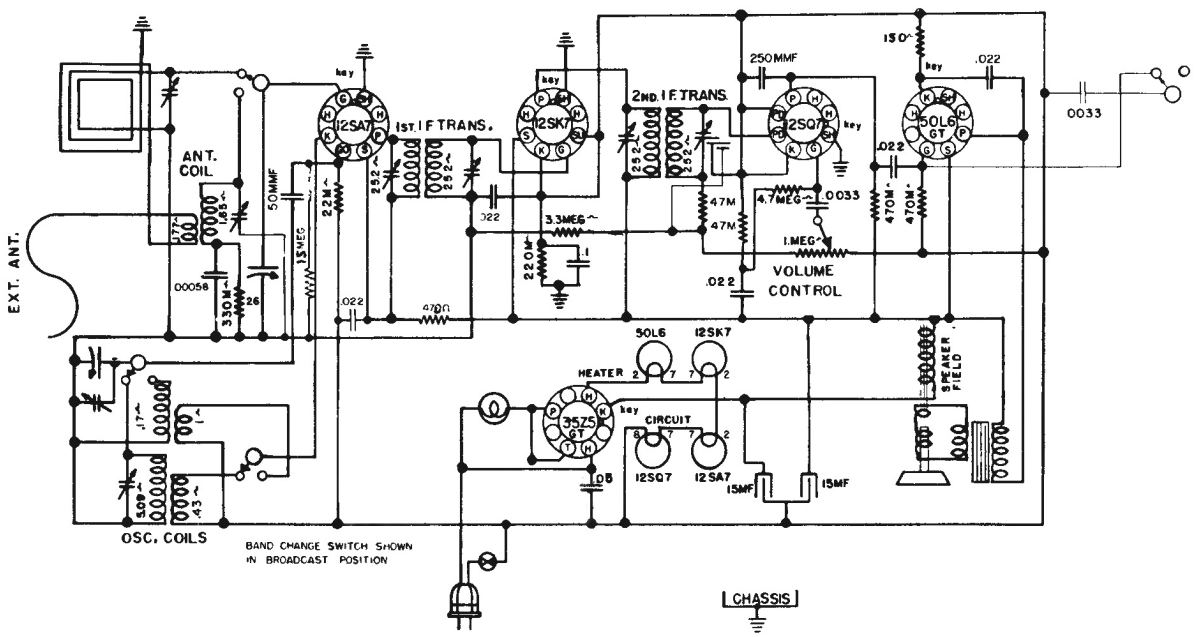
NOTE: When aligning the short-wave oscillator trimmer (C), be sure that the circuit is aligned at the correct frequency and not at the image frequency which is 910 kilocycles lower as indicated by the receiver dial. To check: Tune in the generator frequency, then increase the generator output and tune in the image frequency. The image frequency should be weaker than the fundamental and audible 910 kilocycles lower on the receiver dial. If the image cannot be tuned in, the oscillator trimmer is adjusted to the wrong peak; i.e., the oscillator trimmer may be adjusted to the image or one of the harmonics instead of the fundamental frequency. The correct peak is the second one heard as the trimmer adjustment screw is opened from the completely closed position.