NOTES:
1. BOTTOM VIEW OF TUBE SOCKETS.
2. VOLTAGE MEASURED WITH AN ELECTRONIC VOLTMETER FROM SOCKET LUG TO B- (PIN 5 ON 14Q7).
3. LINE VOLTAGE 117 V. 60 CYCLE.
4. N.C. = NO CONNECTION.
5. W.J. = WIRING JUNCTION.
6. * = A.C. VOLTAGE.
7. SOCKET VOLTAGE TOLERANCE 10 %.

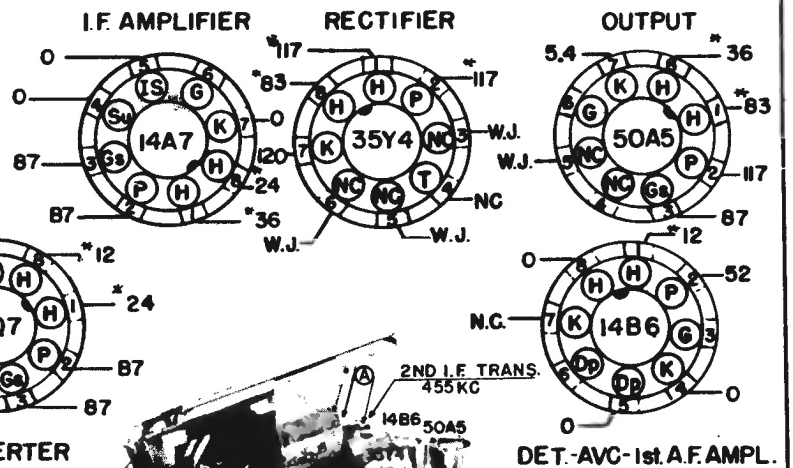

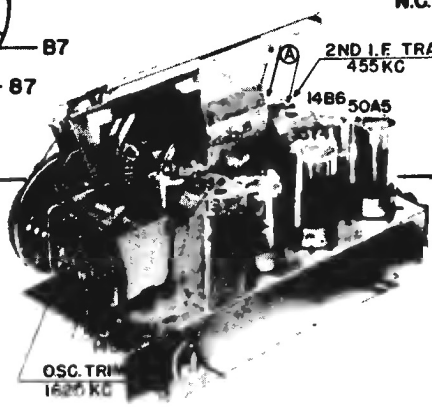

CROSLEY

MODELS 58TC, 58TW

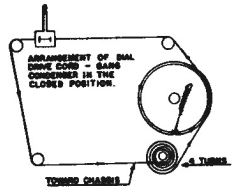
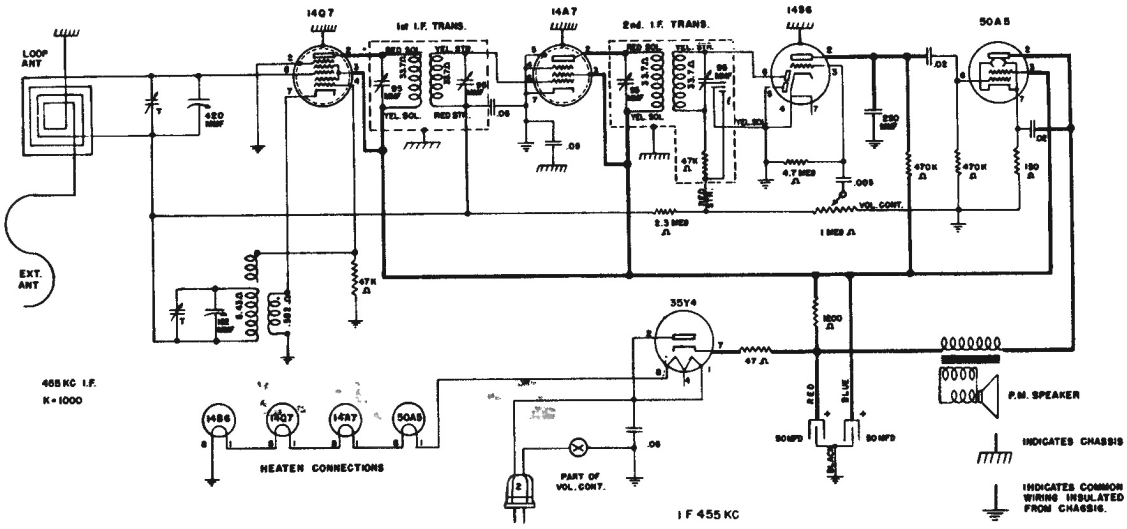
Alignment Sequence	Signal Generator Output			Position of Dial Pointer	Adjust for Maximum Output
	Frequency in kc.	In Series with	To		
1	455	200 mmf.	Ant.	1620	A & B
2	1620	200 mmf.	Ant.	1620	C
3	1400	200 mmf.	Ant.	1400	D