Wiring Diagram For Model 5B3

The Crosley Corp.

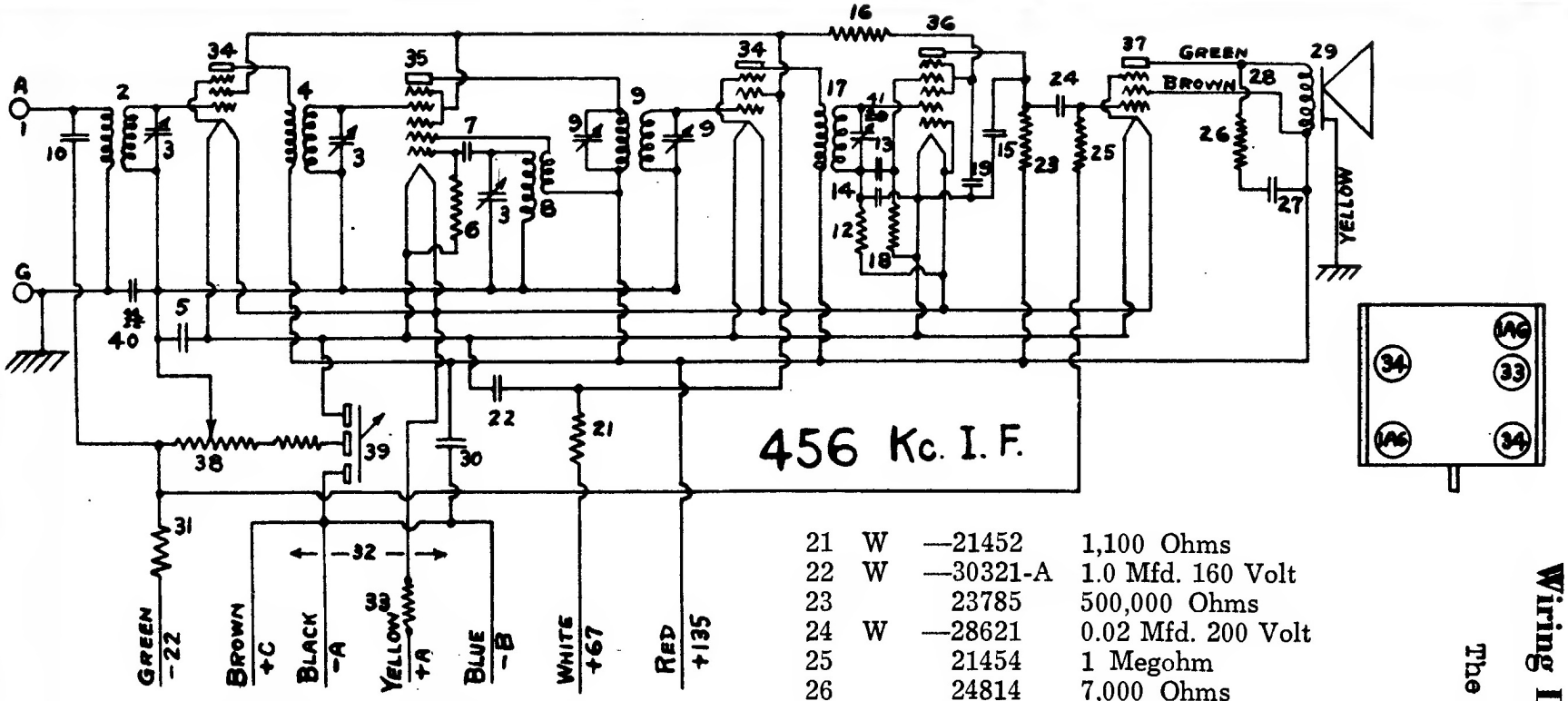

4	G17	—32001	R. F. Transformer
5	W	—24049-B	0.1 Mfd. 200 Volt
6		21875	100,000 Ohms
7	G1	—34004	.025 Mfd. (Mica)
8	G9	—32002	Oscillator Coil
9	G9	—32004	1st I. F. Trans.
10	W	—28621	.02 Mfd. 200 Volt
12		23785	500,000 Ohms
13	W	—28621	.02 Mfd. 200 Volt
14	W	—26152-A	.00015 Mfd. 400 Volt
15			.0001 Mfd. 400 Volt
16		21237-A	60,000 Ohms
17	G13	—32004	2nd I. F. Trans.
18		21454	1 Megohm
19	W	—24049-B	0.1 Mfd. 200 Volt
21	W	—21452	1,100 Ohms
22	W	—30321-A	1.0 Mfd. 160 Volt
23		23785	500,000 Ohms
24	W	—28621	0.02 Mfd. 200 Volt
25		21454	1 Megohm
26		24814	7,000 Ohms
27	W	—28619	.006 Mfd.
28	W	—27933	Speaker Cable
29		30418	336-3B Speaker
30	W	—29910-A	0.25 Mfd. 200 Volt
31		27121	5,000 Ohms
32	G2	—29237	Battery Cable
33	G2	—23300	Air Cell Resistor .53 Ohms
34	G31	—27975	34 Socket
35	G55	—27975	1A6 Socket
36	G4	—33070	1A6 Flex. Socket
37	G36	—27975	33 Socket
38	W	—32649	Volume Cont. 10,000 Ohms
39			Switch 3. P. S. T.
40	W	—24049-B	O.1 Mfd. 200 Volt

Figures in first column correspond to figures in diagram