PARTS LIST—MODELS 666 and 5666

Figures in first column refer to parts in Diagrams.

Item No.	Part No.	Name
1	W —37922	6-8 V. Bulb, Dial Light
	G3 —37965	Socket Assy., Dial Light
2	G82 —32000	Coil Antenna—2350—7000 Kc.
3	G81 —32000	Coil Antenna—540—1725 Kc.
4	G 65—32002	Coil—2350—7000 Kc., Osc.
5	G 66—32002	Coil— 540—1725 Kc., Osc.
6	G118—32004	Coil—Assy., 1st I-F.
7	G 72—32004	Coil—Assy., 2nd I-F.
8	W —36055	Cond. 35 Mf. 400 V.
9	W —36057	Cond. 40 Mf. 300V.
10	W —30270	Cond. .001 Mf. 400V.
11	W —30805	Cond. .01 Mf. 400V.
12Z	W —30322-A	Cond. .00017 Mf.
12Y		Cond. .006 Mf.
13	W —23615	Cond. .05 Mf. 400V.
14	W —23191-A	Cond. .01 Mf. 400V.
15 AZ	W —28623	Cond. .02 Mf. 400V.
15 AY		Cond. .02 Mf. 400V.
15 BZ	W —28623	Cond. .02 Mf. 400V.
15 BY		Cond. .02 Mf. 400V.
16	W —27216	Cond. .05 Mf. 200V.
17 Z	W —31052	Cond .004 Mf. 400V.
17 Y		Cond. .05 Mf. 400V.
18	W —37732	Cond. .3 Mf. 160V.
19	W —37241	Cond. 4 Section Trimmer
20	G 31—33006	Cond. Series Trimmers
21	G 17—33001	Cond. Var. Tuning
	W —41736	Drive Unit, 8Pt. Disc. Assy.
	W —41897	Dial-Calibrated Glass (Model 666 —Only)
	W —41737	Mtg. Brkt. Dial Glass R.H.
	W —41738	Mtg. Brkt., Dial Glass, L.H.
	W —41739	Drive Unit
	B —42617	Dial (Calibrated) (Model 5666 Only)
	MG-14—41980	Dial Glass, Mtg. Brkt. R.H.
	W —40798	Dial Glass, Mtg. Brkt., L.H.
	W —40797-A	Dial Glass Retaining Brkt.
	W —42629	Pointer—Dial
	W —40795	Shaft—Pointer
	W —40909	Washer (Spring) Shaft
	W —41611	Ring-Shaft, Retaining
	B —42374-A	Mask (Metal) Dial
22	B —33906-A	Cord & Plug—Power
23	— 5370-A	Resistor, 20,000 Ohm 1W
24	—35928	Resistor, 60,000 Ohm ¼W

Item No.	Part No.	Name
25	—21875	Resistor, 100,000 Ohm, ¼W
26	—35929-C	Resistor, 150,000 Ohm, ¼W
27	—33344	Resistor, 400,000 Ohm. ¼W
28	—37245-C	Resistor, 1.5 Megohm ¼W
29	—36316	Resistor, 2.700 Ohm. ¼W
30	W —28106	Resistor, 500 Ohm. ½W. Flex.
31Z	W —37246	Resistor, 1,000 Ohm (Candohm)
31Y		Resistor, 2,000 Ohm (Candohm)
31X		Resistor, 185-185 Ohm (Candohm)
32	G47 —28807	Socket—Type 6A7
33	G75 —28807	Socket—Type 6D6
34	G80 —28807	Socket—Type 76
35	G41 —28807	Socket—Type 75
36	G90 —28807	Socket—Type 6B5
	W —27981	Base—Tube Shield
	W —40911	Shield—Tube
37	244—BL—9	Speaker, "B" Spec. 50A-2
	—42928	Cone Assy., For above Speaker
	—41473	Output Trans., For above Speaker
	632—CJ—3	Speaker, "M" Spec. 1-D-610
	—42879	Cone Assy., For above Speaker
	—42880	Field Coil, For above Speaker
	—42881	Output Trans., For above Speaker
38	—37247	Switch, Band Sel.
39	W—36184-A	Switch, Tone Con.
40	G1 —26719	Terminal Board, Ant. & Grid
41	—41978	Transformer, 110V.—60 Cy. Power
42Z	—37395	Volume Control (3 Meg.) 1st A-F Grid
42Y		Line Switch
42X		Volume Control (1 Meg.) Output Grid
43	NONE	
44	—35601	Resistor, 300 000 Ohm ¼ W. Output Grid to Grd.*
	B —40590	Escutcheon, 666)
	W —42345	Escutcheon, (5666)
	D —28	Escutcheon Mtg. Screws
	W —37339	Knob, (2) V.C.&S.S.
	W —37341	Knob, (2) T.C. & B. S. W
	—36297	Volume Control, 3 Meg.*
	AG	Cabinet Model 666
	MA	Cabinet Model 5666

*May be used in place of Dual Volume Control.

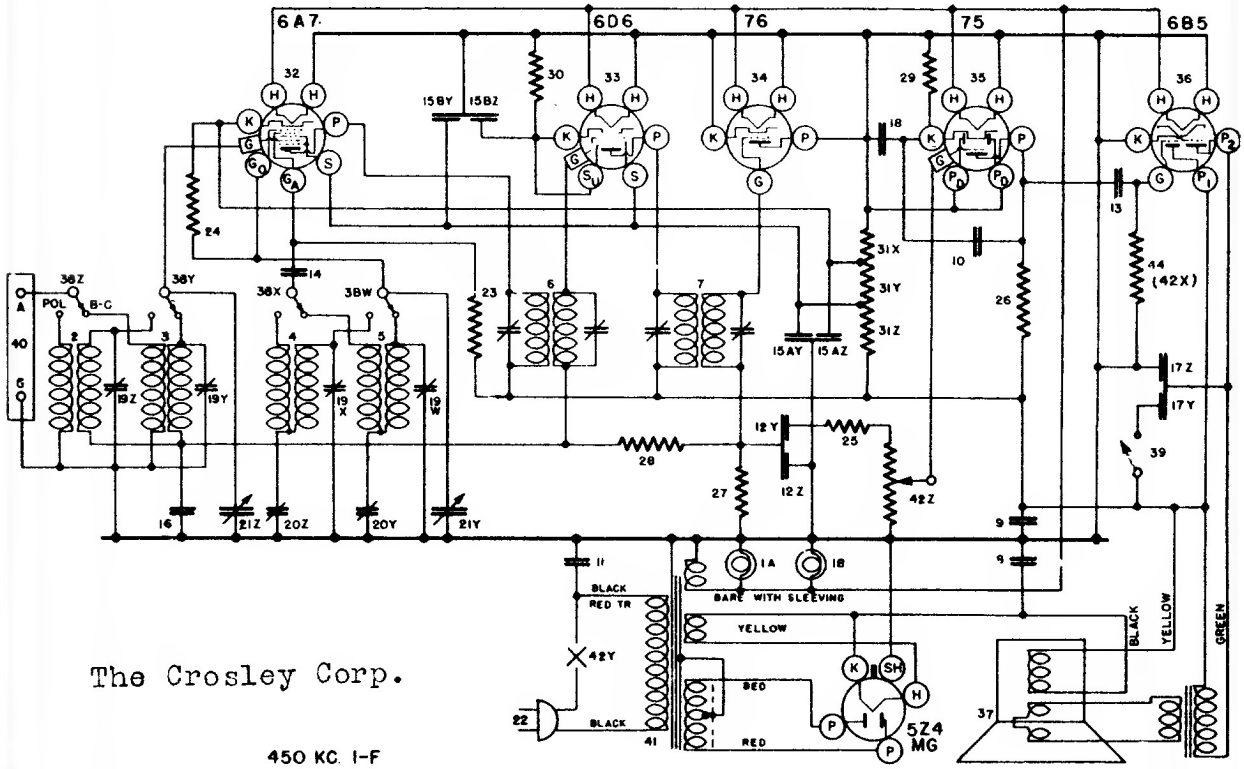

The Crosley Corp.

WIRING DIAGRAM—MODELS 666 AND 5666