CROSLEY

MODELS: E30BE, E30GN, E30MN, E30TN (Chassis 30E: 30E-1)

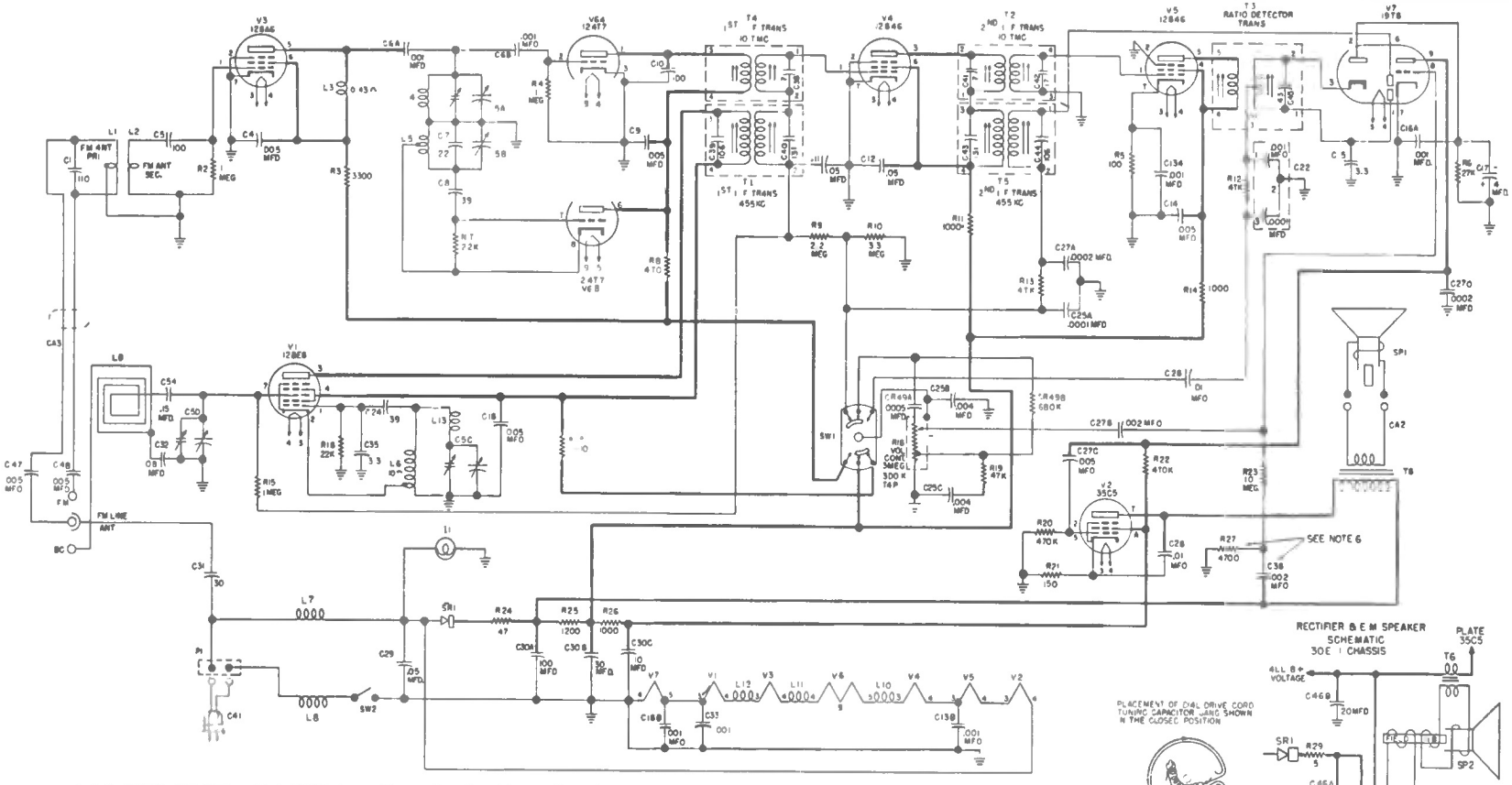

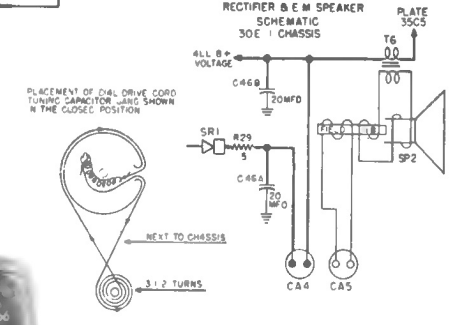

FREQUENCY RANGE: Standard Broadcast Band (AM); 540 to 1620 kc.

Frequency Modulation Band (FM); 88 to 108 megacycles.

INTERMEDIATE FREQUENCY: Standard Broadcast Band; 455 kc.

Frequency Modulation Band; 10.7 mc.

FM ANTENNA INPUT IMPEDANCE: 75 ohms balanced.

POWER SUPPLY: a.c.—d.c.

VOLTAGE RATING: 105-125 volts.

POWER CONSUMPTION: 40 watts at normal power supply voltage (117 volts).

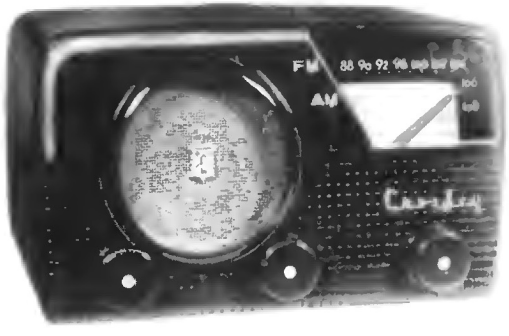

NOTES

1 K=1000
2 I F=455 KC AM
I F=10 TMC FM
3 ALL CAPACITANCE VALUES IN MMF AND ALL RESISTANCE VALUES IN OHMS UNLESS OTHERWISE SPECIFIED
4 BAND CHANGE SWITCH SHOWN IN AM (COUNTER CLOCKWISE) POSITION
5 NUMBER 1 TERMINAL ON I F TRANSFORMERS CODED BY GREEN DOT. NUMBERS PROGRESS CLOCKWISE THESE NUMBERS MAY NOT AGREE WITH TRANSFORMERS BASE CODING EXCEPT GREEN DOT & NUMBER 1
6 R27 AND C36 ARE USED WITH FM SPEAKERS ONLY

CROSLEY

Models: E30BE, E30GN, E30MN, E30TN,
Chassis 30E, 30E-1

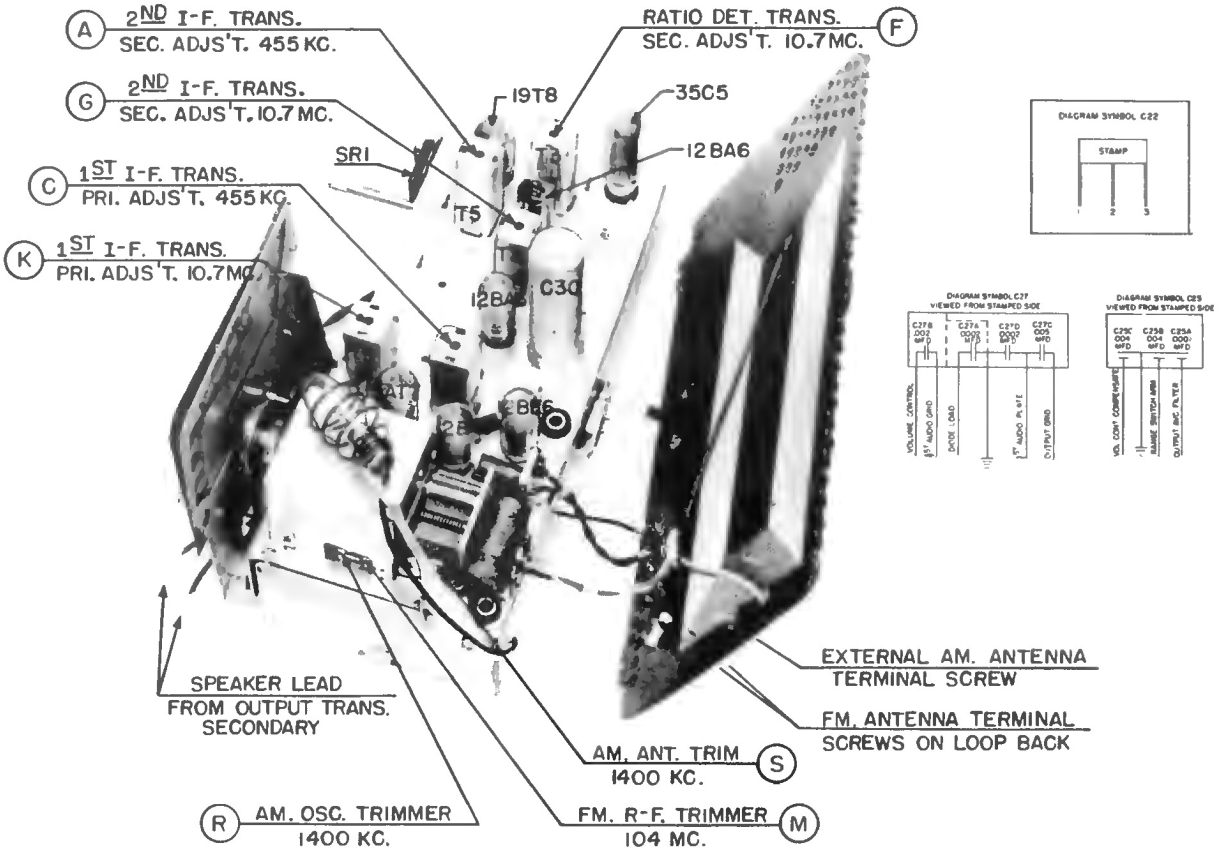

CHASSIS TOP VIEW SHOWING ALIGNMENT ADJUSTMENTS

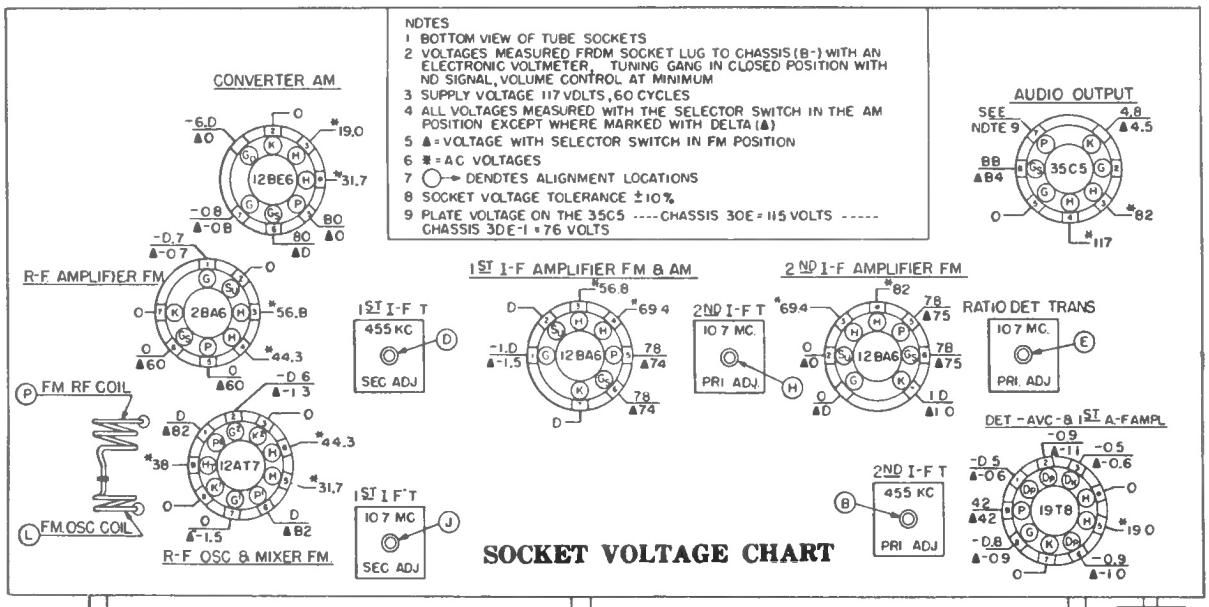

SOCKET VOLTAGE CHART