DeWALD Radio Model E-522

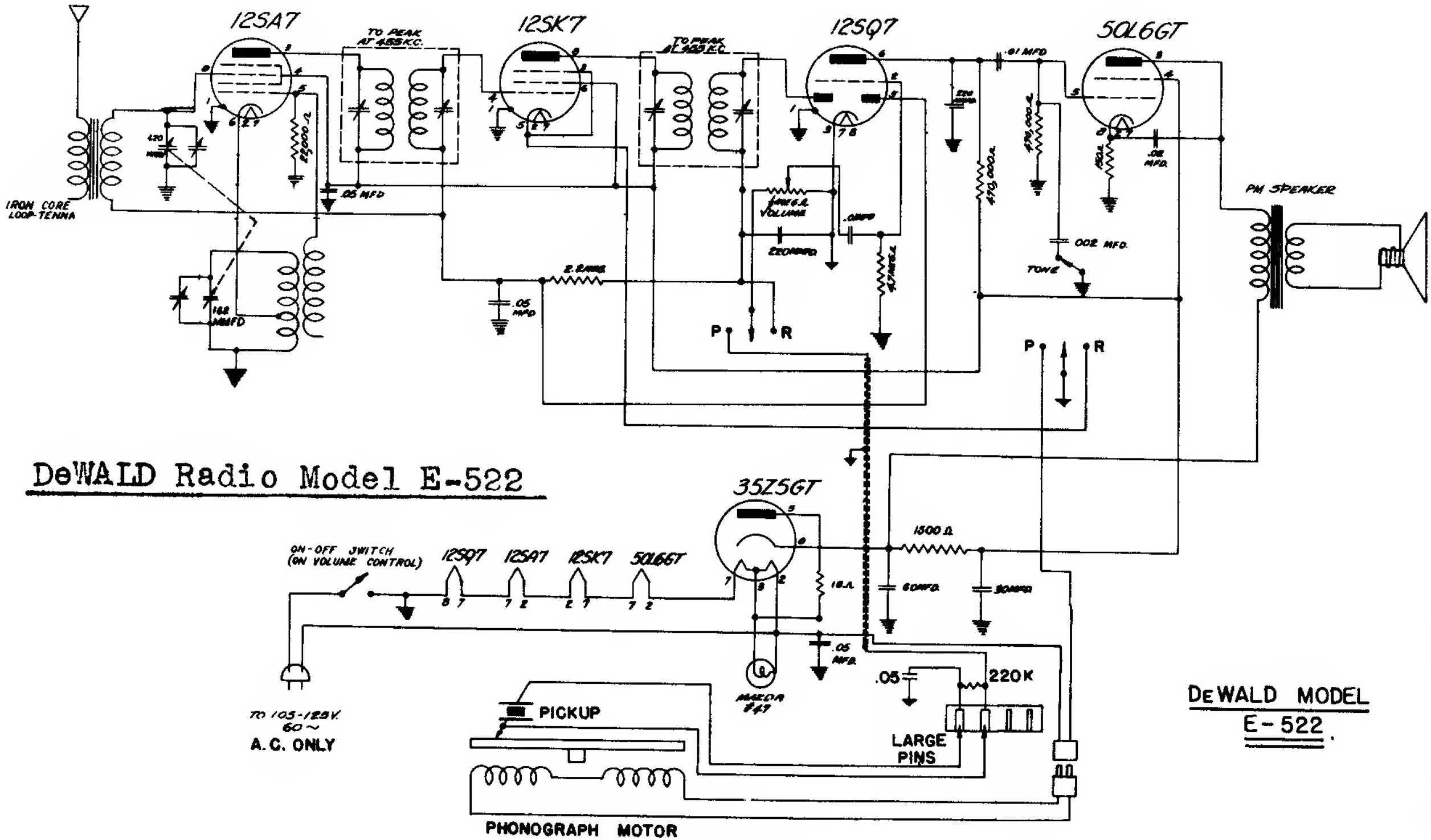

DeWALD MODEL
E-522