MODEL 147E

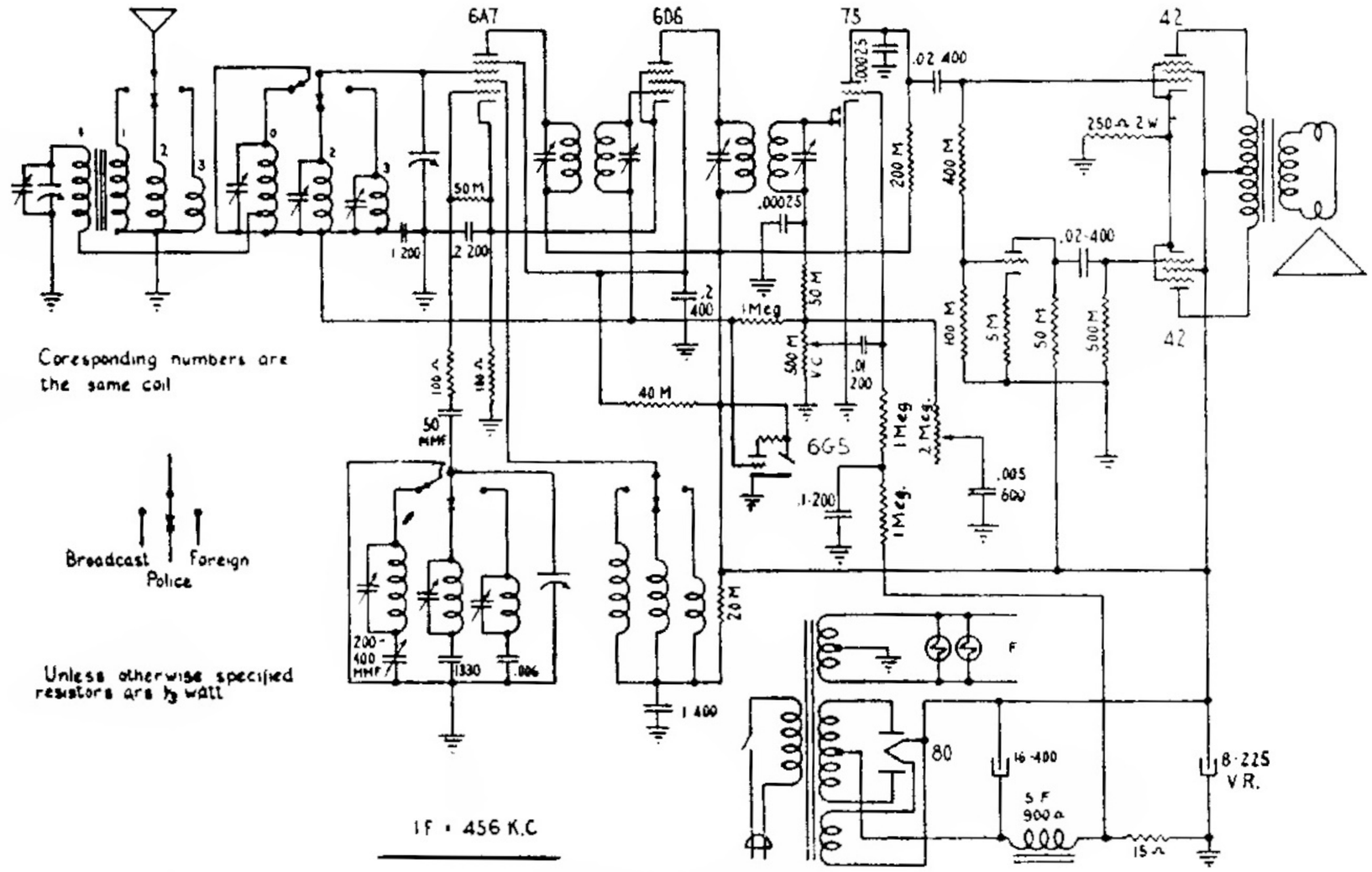

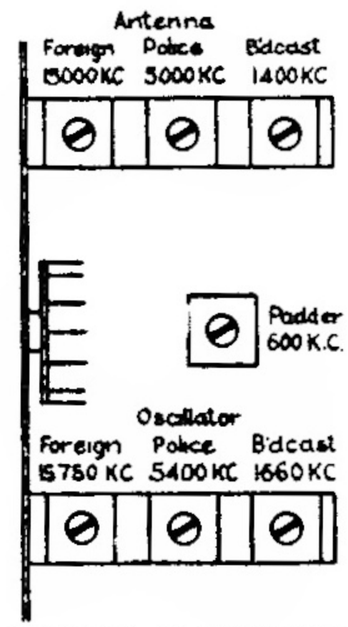

TRIMMER ADJUSTMENT

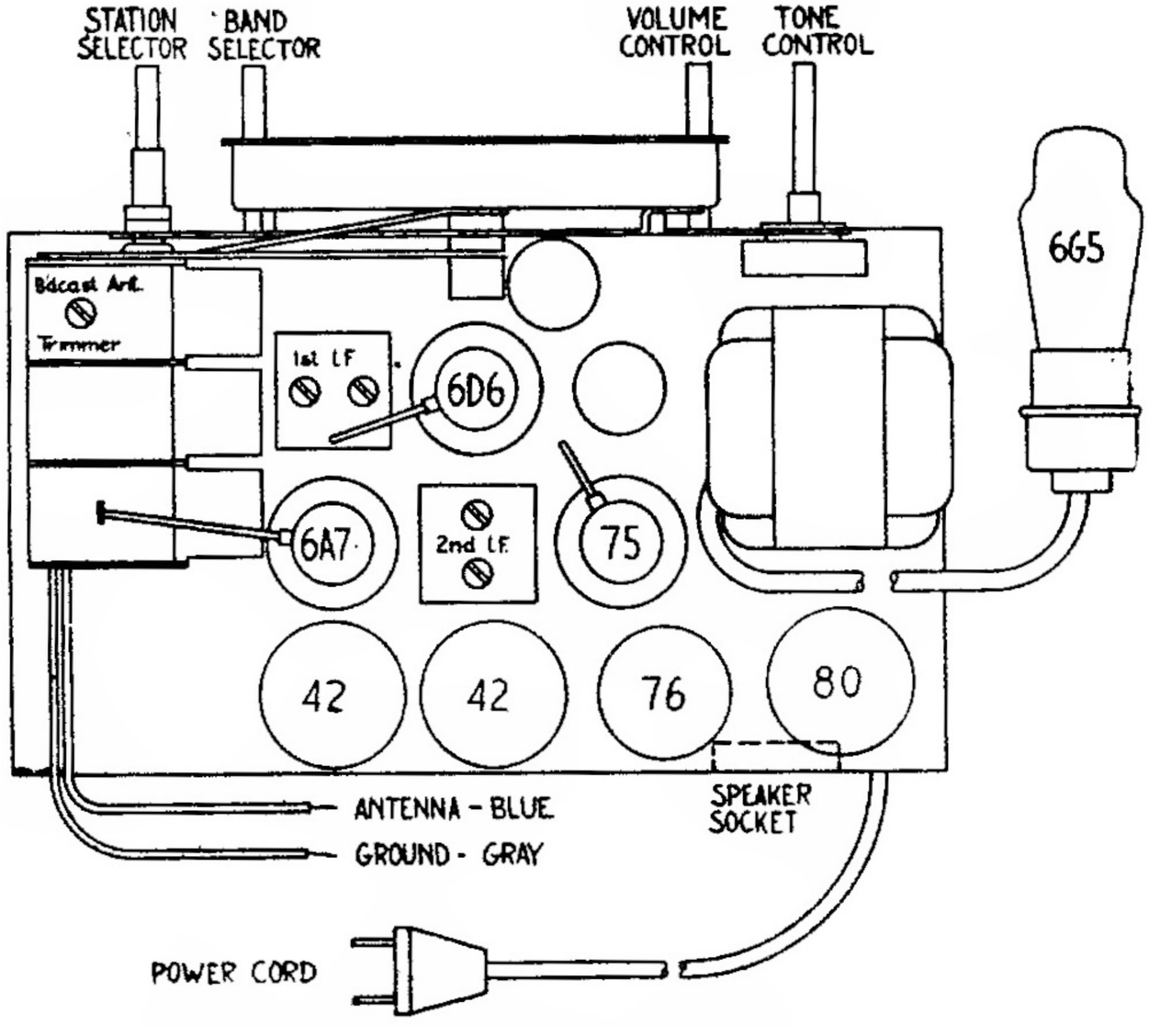

For alignment use a signal generator. Couple through .1 mfd. condenser to grid of 6A7, and chassis. Set for 456 KC. Adjust 2nd I.F. and then 1st. Recheck. For R.F. alignment, feed 1660 KC. to antenna thru a 200 mmfd. condenser. Adjust Broadcast osc. trimmer. Set for 1400 KC. and adjust the two antenna trimmers. Set for 600 KC. and adjust padder while rocking tuning condenser. For short wave alignment see next page.