DEWALD RADIO MFG. CORP.

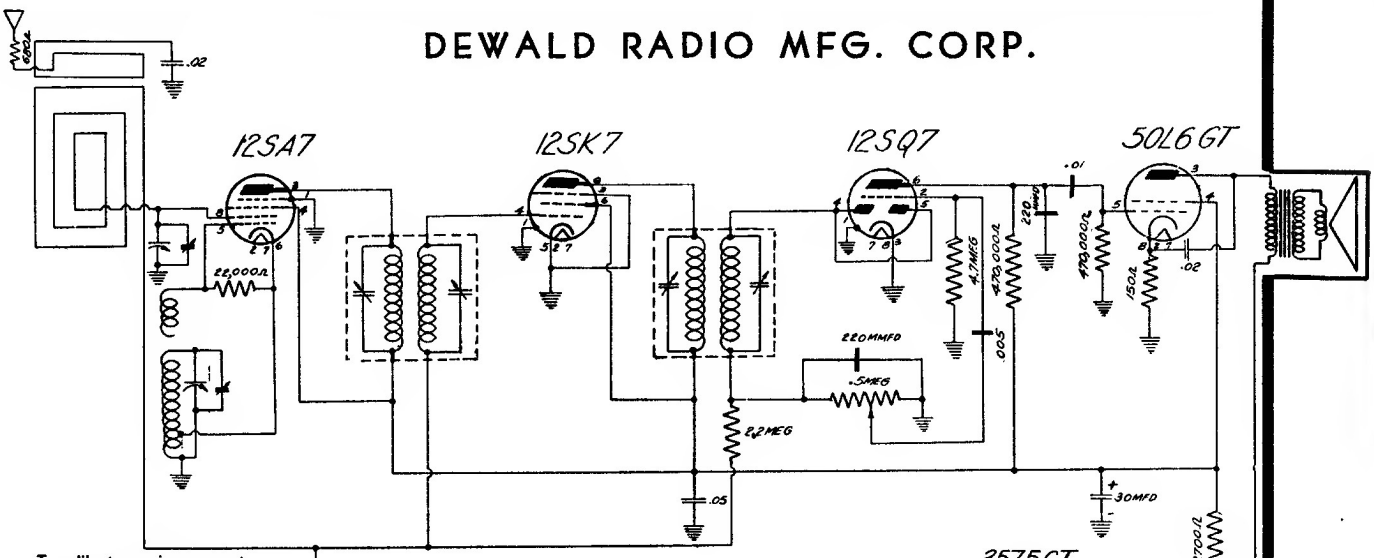

To calibrate receiver connect the output of signal generator to the flexible antenna lead attached to the loop antenna. Connect the lowside of signal generator through a 1/10 mfd. condenser to receiver chassis. Adjust signal generator to 455 kilocycles and adjust both I. F. transformers for maximum signal. Open the receiver variable condenser for minimum capacity. Set signal generator at 1720 kilocycles. Peak oscillator section of receiver condenser for maximum signal. Next set signal generator at 1500 kilocycles. Tune in this signal. Adjust R. F. section of receiver variable condenser for maximum signal strength. Keep the signal generator output as low as possible when making all of these measurements.

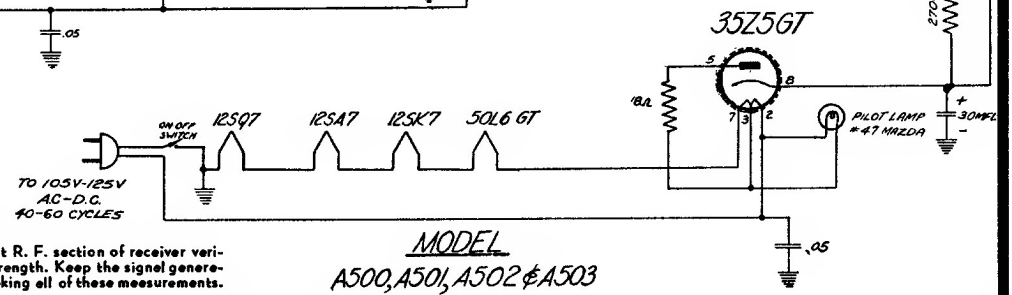

MODEL
A500, A501, A502 & A503

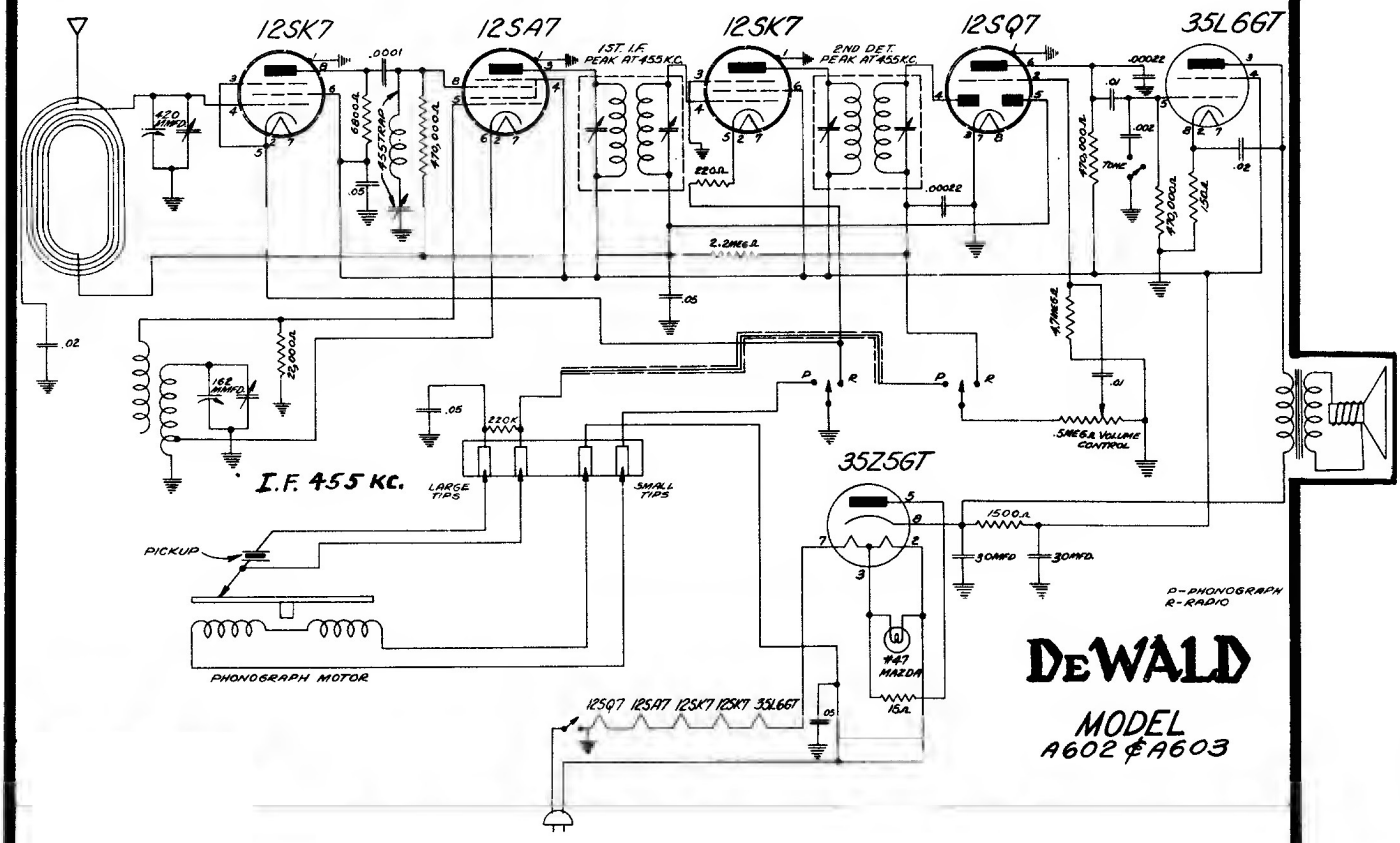

DeWALD

MODEL
A602 & A603