DeWALD RADIO MANUFACTURING CORP.

MODEL D-E 517 A

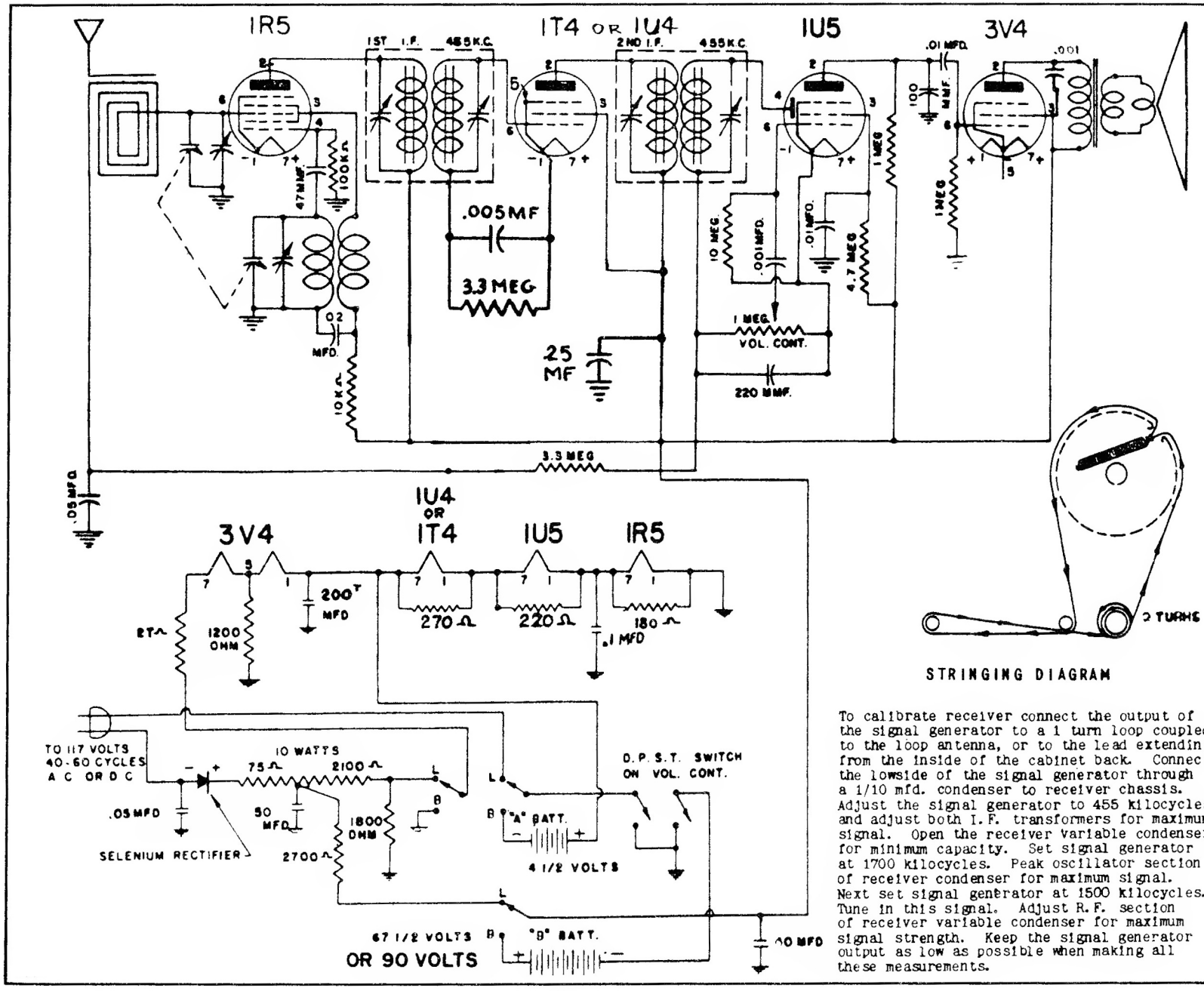

STRINGING DIAGRAM

To calibrate receiver connect the output of the signal generator to a 1 turn loop coupled to the loop antenna, or to the lead extending from the inside of the cabinet back. Connect the lowside of the signal generator through a 1/10 mfd. condenser to receiver chassis. Adjust the signal generator to 455 kilocycles and adjust both I.F. transformers for maximum signal. Open the receiver variable condenser for minimum capacity. Set signal generator at 1700 kilocycles. Peak oscillator section of receiver condenser for maximum signal. Next set signal generator at 1500 kilocycles. Tune in this signal. Adjust R.F. section of receiver variable condenser for maximum signal strength. Keep the signal generator output as low as possible when making all these measurements.