MODELS 107 and 111

Chassis Model U6A

L1	456 kc adjustable wave-trap
L2	Filter choke—500 ohms
T1, T2, T3	Three-band antenna coil assembly
T4, T5, T6	Three-band oscillator coil assembly
T7	456 kc first i-f transformer
T8	456 kc second i-f transformer
R1, R8	50,000 ohm, ¼ watt carbon resistor
R2	500 ohm, ½ watt wire-wound resistor
R3, R7, R11	1 megohm, ¼ watt carbon resistor
R4	30,000 ohm, ¼ watt carbon resistor
R5, R17	10,000 ohm, ¼ watt carbon resistor
R6	850 ohm, ½ watt wire-wound resistor
R9, R13	100,000 ohm, ¼ watt carbon resistor
R10, S2	Volume control with line switch—0.5 megohms
R12	200,000 ohm, ¼ watt carbon resistor
R14	Tone control—0.25 megohms
R15, R16	500,000 ohm, ¼ watt carbon resistor
R18	5,000 ohm, ¼ watt carbon resistor
R19	Wire-wound ballast resistor—130 ohms
C1, C2	Two-gang variable condenser
C3, C4, C21, C22, C25	0.1 mf, 200 volt tubular condenser
C5	0.0001 mf mica condenser
C6, C7	Dual adjustable padding condenser C6—250 to 550 mmf. C7—800 to 1400 mmf.
C8, C9, C10, C11, C12, C13, C14	Seven-section condenser block C8—0.1 mf, 200 v. C12—0.1 mf, 200 v. C9—0.1 mf, 200 v. C13—0.1 mf, 200 v. C10—0.2 mf, 200 v. C14—0.1 mf, 200 v. C11—0.05 mf, 200 v.
C15	0.02 mf, 200 v. tubular condenser
C16, C20, C24	0.00025 mf mica condenser
C17, C18	0.01 mf, 200 v. tubular condenser
C19	0.006 mf, 200 v. tubular condenser
C23, C31	0.001 mf mica condenser
C26	0.25 mf, 200 v. tubular condenser
C27, C28, C29	4, 8 and 16 mf electrolytic filter condenser block C27—4 mf, 150 v. C29—16 mf, 150 v. C28—8 mf, 150 v.
C30	Tubular 4 mf, 150 v. electrolytic condenser
C32	0.005 mf mica condenser

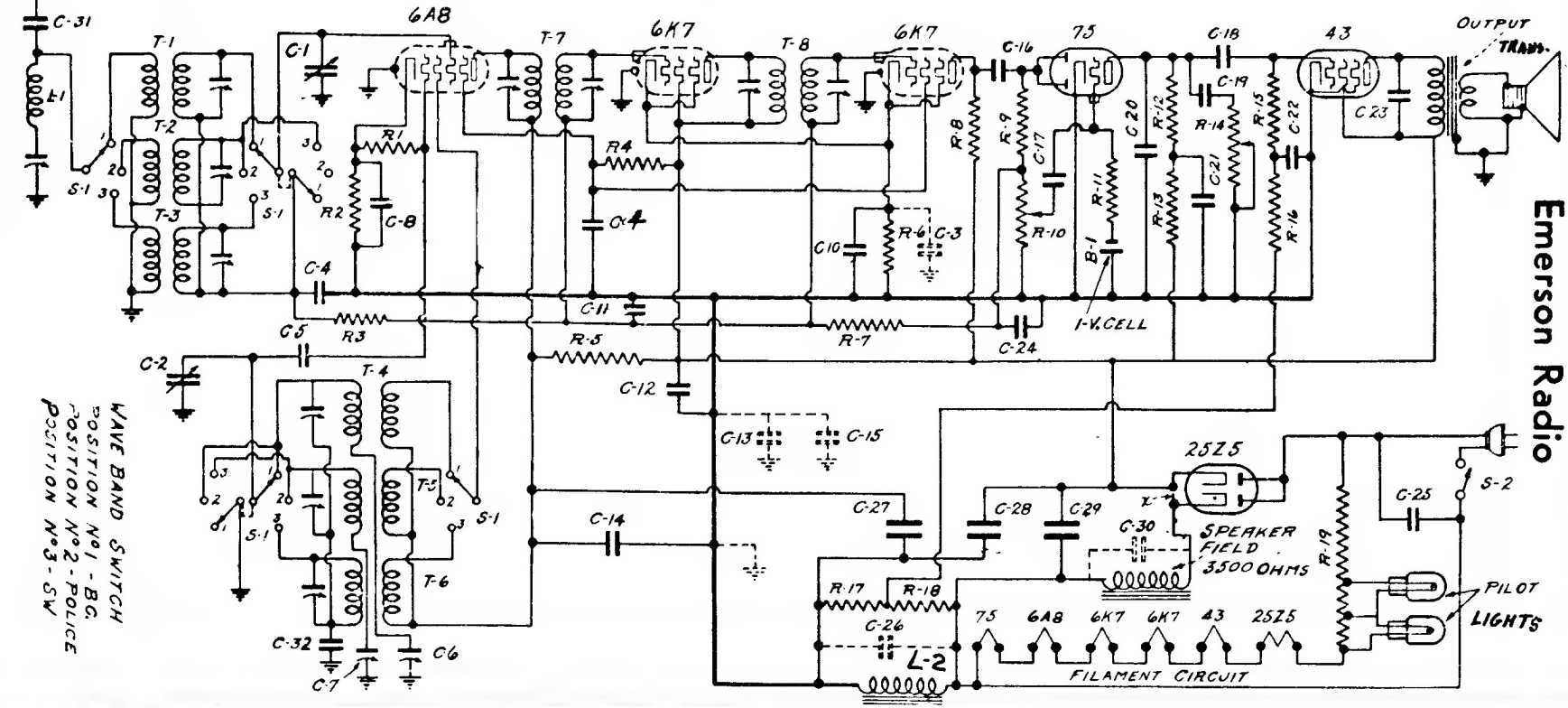

Emerson Radio