EMERSON RADIO

MODELS: 590, 623

CHASSIS MODELS: 120101A, 120101B

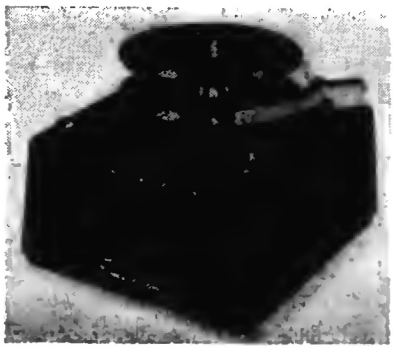

MODEL 590

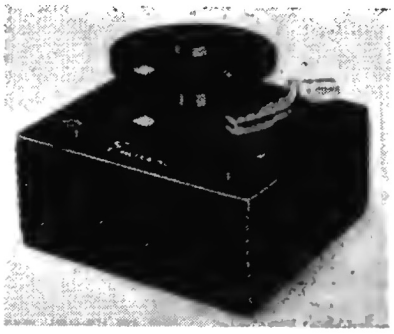

MODEL 623

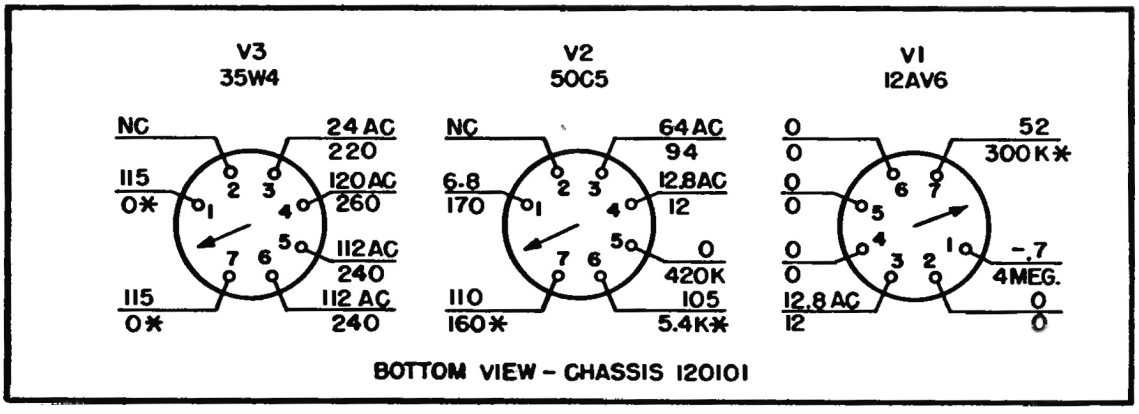

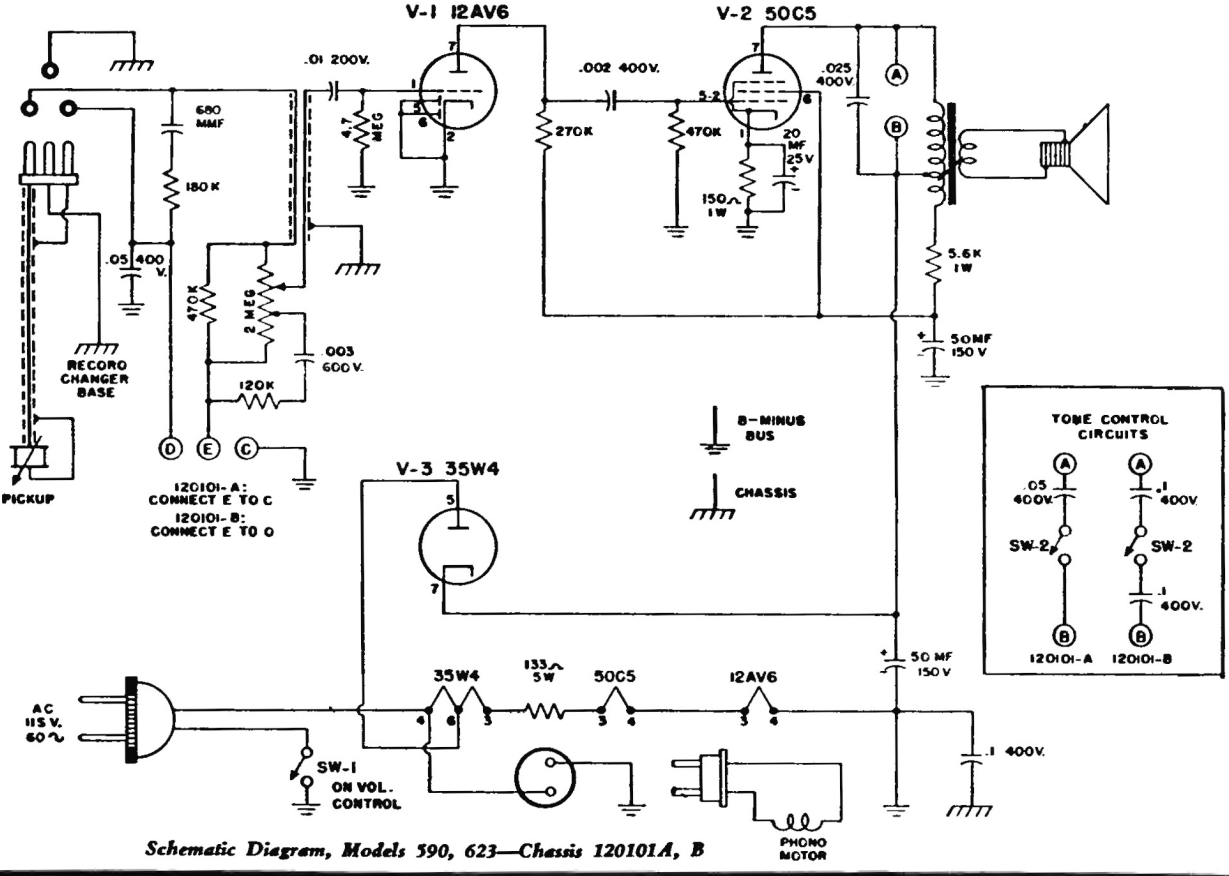

Schematic Diagram, Models 590, 623—Chassis 120101A, B