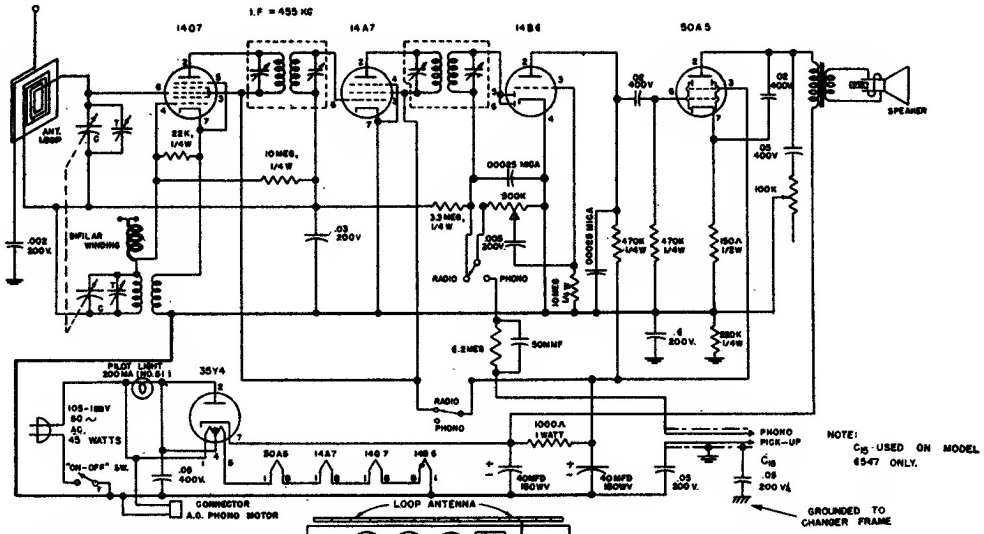

TUBE COMPLEMENT

TUBE	LOCTAL	OCTAL	MINIATURE
V_1	14Q7		12BE6
V_2	14A7		12BA6
V_3	14B6		12AT6
V_4	50A5	50L6	50B5
V_5	35Y4		35W4

Espey Mfg. Co.

Models 20516A, and 6547.

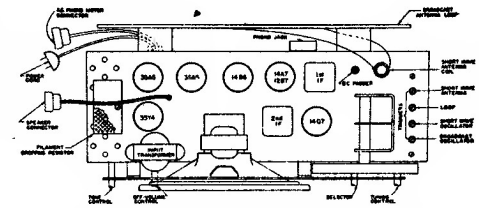

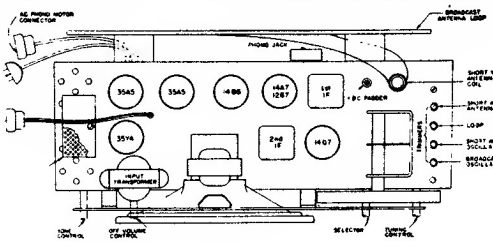

Steps	Connect output of Generator to	Tune Osc. to	Band Switch on	Tune Radio Dial to	Adjust the following Max. Peak Output
1	Tuning condenser stator (ant.) in series with .01 mfd	455 Kc	Best	Quiet point on high frequency end of dial	1st and 2nd IF transformers
2	Antenna term. of Ant. loop in series with 100 mmf.	1660 Kc	Best	Full clockwise (out of mesh)	B.C. Osc. Trimmer
3	Same	1500 Kc	Best	Signal (1500 Kc)	B.C. loop trimmer
4	Same	600 Kc	Best	600 Kc	Osc. padder (rock in)
5	Same	1660 Kc	Best	Full clockwise (out of mesh)	B.C. Osc. Trimmer
6	Ant. term. in series with 100 mmf and 400 ohm resistor	18.6 Mc	S.W.	Full clockwise (out of mesh)	S.W. Osc. Trimmer
7	Same	18.0 Mc	S.W.	Signal (18.0 Mc)	S.W. Ant. Trimmer

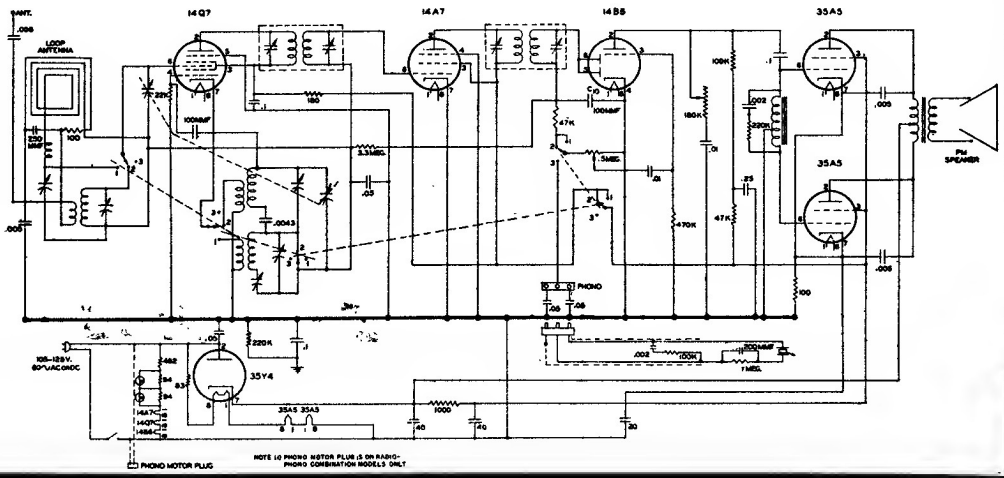

Espey Mfg. Co.

Models 20626-A, and 97-A.