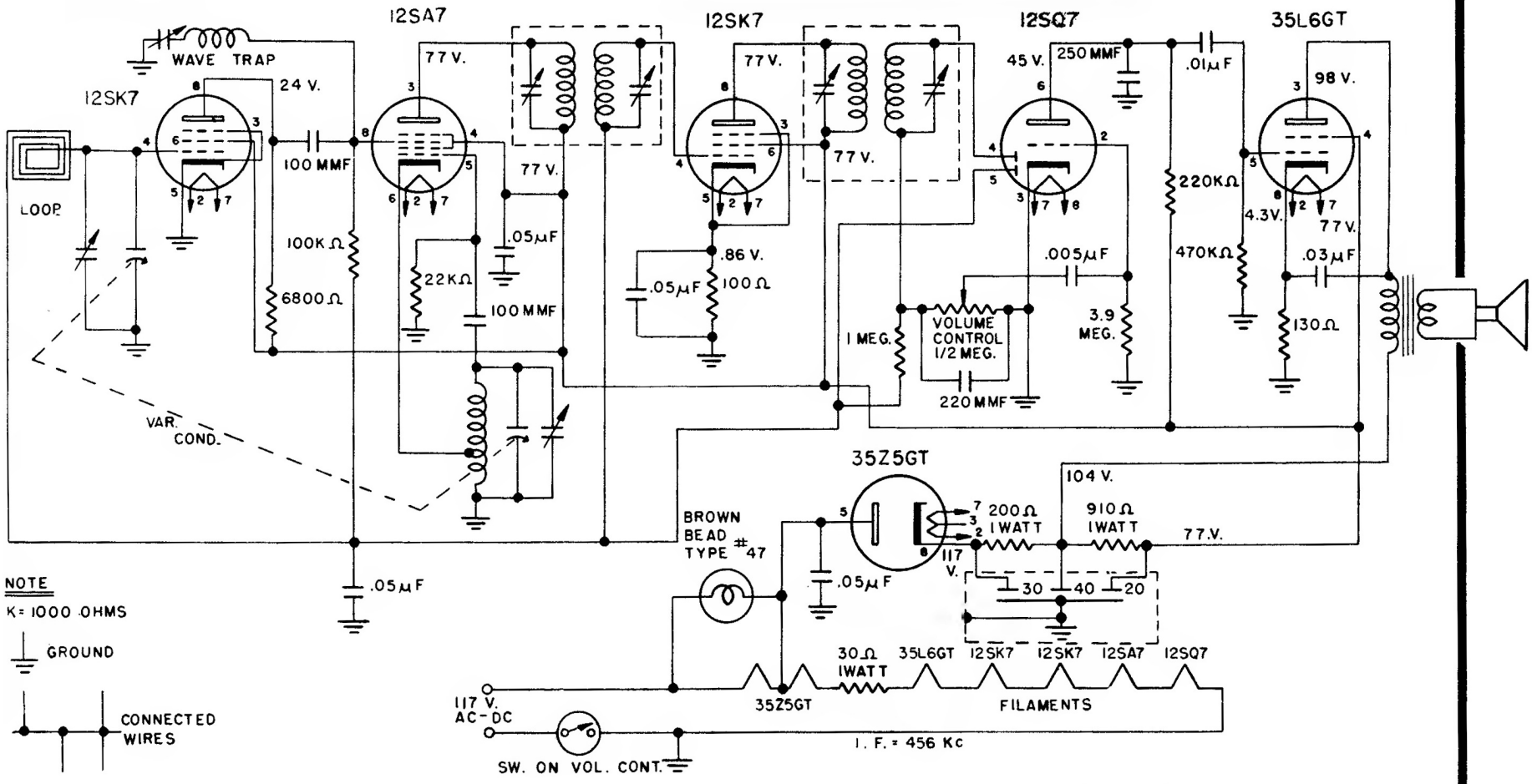

VOLTAGE READINGS TAKEN WITH
20,000 OHMS PER VOLT METER
NO SIGNAL CONDITION
117 VOLT 60 CYCLE LINE
TUNING RANGE 528 – 1680 Kc

Power supply (25-60 cycles AC) 95-125V AC-DC

Power consumption 30 Watts

Frequency Range 1680-528 KC

MODEL 1000
SCHEMATIC
FADA RADIO & ELECTRIC CO., INC.
LONG ISLAND CITY, N.Y. U.S.A.