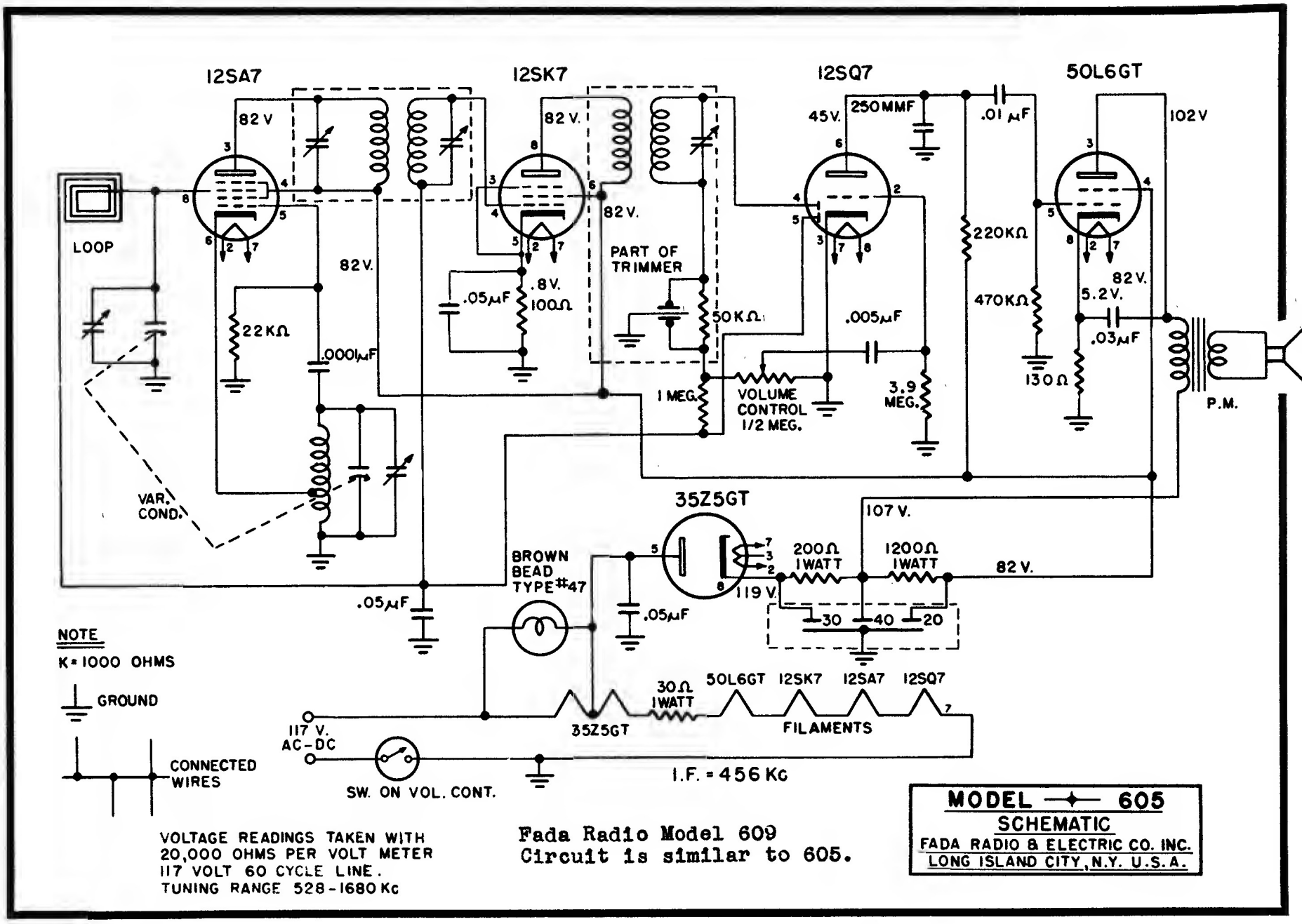
12SA7
12SK7
12SQ7
50L6GT
82 V
82 V.
82 V.
45V.
250MMF
.01 μF
102V
LOOP
82 V.
PART OF TRIMMER
.8V.
100Ω
.05μF
22KΩ
.0001μF
50KΩ
.005μF
220KΩ
470KΩ
82 V.
5.2V.
.03μF
130Ω
1 MEG.
VOLUME CONTROL 1/2 MEG.
3.9 MEG.
P.M.
VAR. COND.
35Z5GT
107 V.
BROWN BEAD TYPE #47
200Ω 1WATT
1200Ω 1WATT
82 V.
119 V.
.05μF
.05μF
30
40
20
NOTE
K = 1000 OHMS
GROUND
CONNECTED WIRES
30Ω 1WATT
50L6GT
12SK7
12SA7
12SQ7
117 V. AC-DC
35Z5GT
FILAMENTS
SW. ON VOL. CONT.
I.F. = 456 Kc
VOLTAGE READINGS TAKEN WITH
20,000 OHMS PER VOLT METER
117 VOLT 60 CYCLE LINE.
TUNING RANGE 528-1680 Kc
Fada Radio Model 609
Circuit is similar to 605.
MODEL 605
SCHEMATIC
FADA RADIO & ELECTRIC CO. INC.
LONG ISLAND CITY, N.Y. U.S.A.