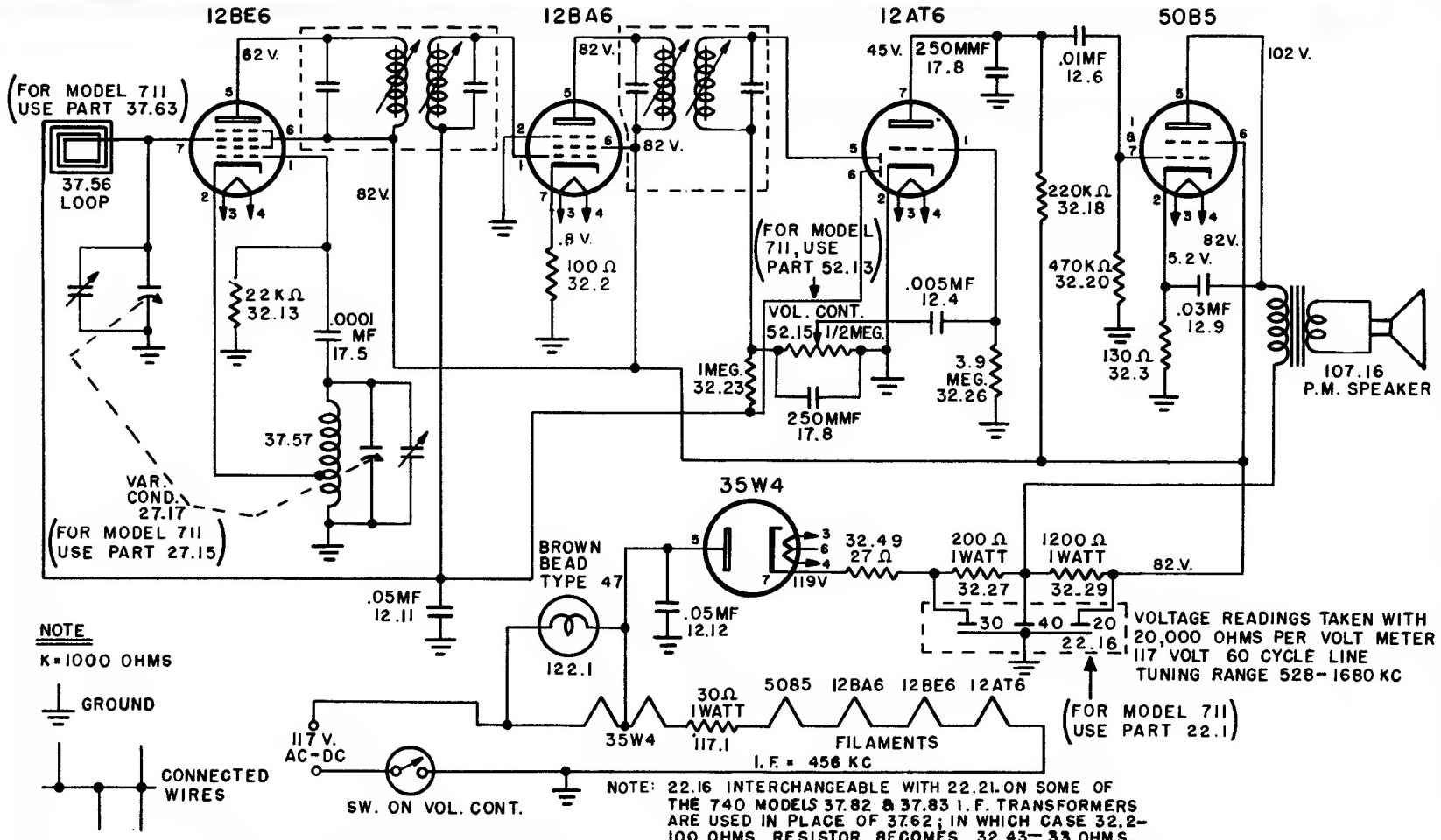

NOTE: 22.16 INTERCHANGEABLE WITH 22.21 ON SOME OF THE 740 MODELS 37.82 & 37.83 I.F. TRANSFORMERS ARE USED IN PLACE OF 37.62; IN WHICH CASE 32.2-100 OHMS RESISTOR BECOMES 32.43-33 OHMS.

Power consumption: 30 Watts
Frequency Range: 530-1680 KC
I.F. Circuits: 456 KC

12.4	Tubular Condenser, .005 mf, 600 V
12.6	Tubular Condenser, .01 mf, 400 V
12.9	Tubular Condenser, .03 mf, 400 V
12.11	Tubular Condenser, .05 mf, 200 V
12.12	Tubular Condenser, .05 mf, 400 V
17.5	Mica Condenser, 100 mmf, ±10%
17.8	Mica Condenser, 250 mmf, ±20%
22.16	3 Section Electrolytic Condenser, 30-40-20 mf, 150 W.V.

MODEL 711 & 740
SCHEMATIC
FADA RADIO & ELECTRIC CO. INC.
BELLEVILLE, NEW JERSEY U.S.A.