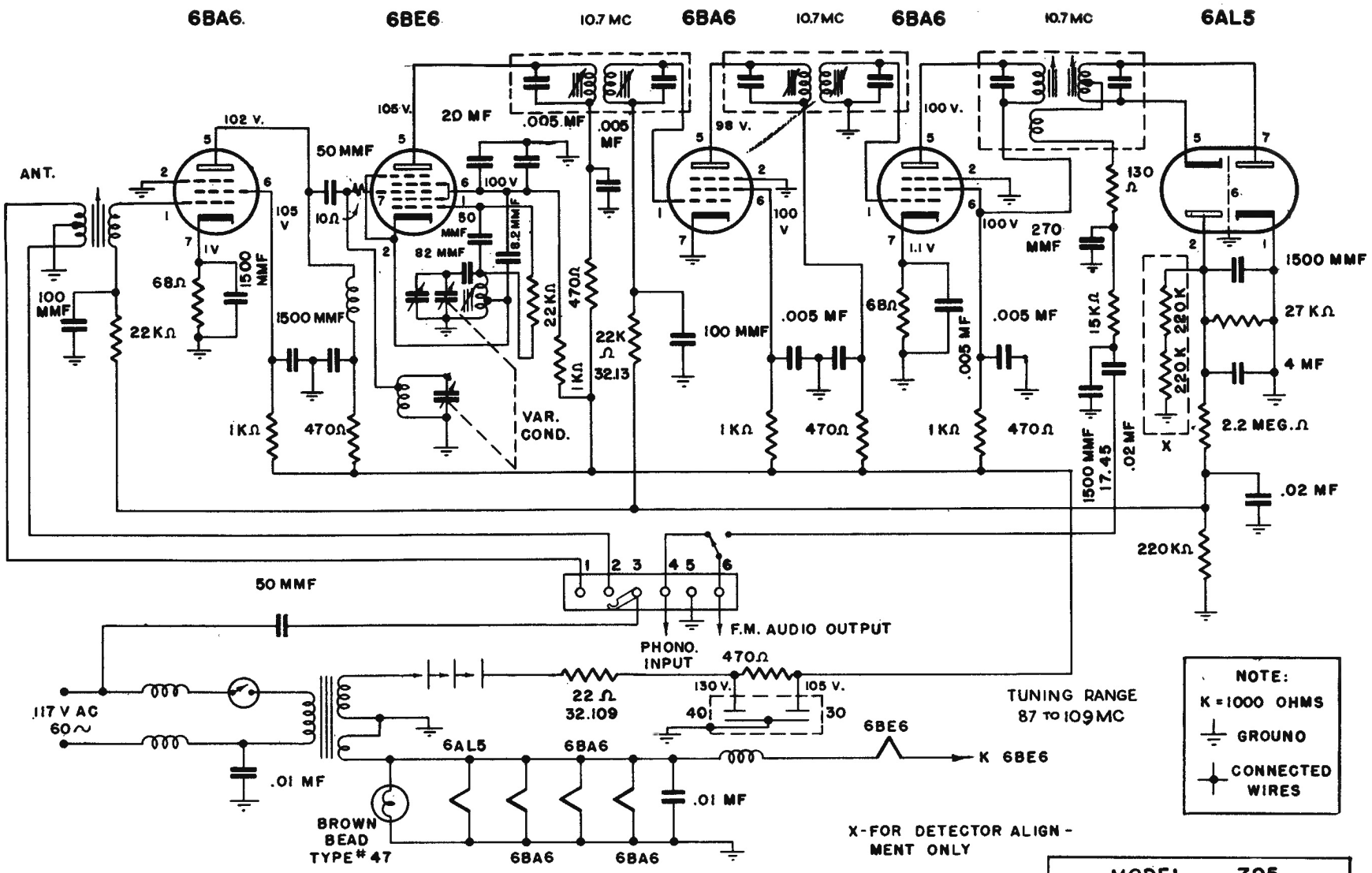

795 SERIES

5 Tube AC Superheterodyne FM Tuner

MODEL 795
SCHEMATIC
FADA RADIO & ELECTRIC CO, INC.
BELLEVILLE, NEW JERSEY U.S.A.