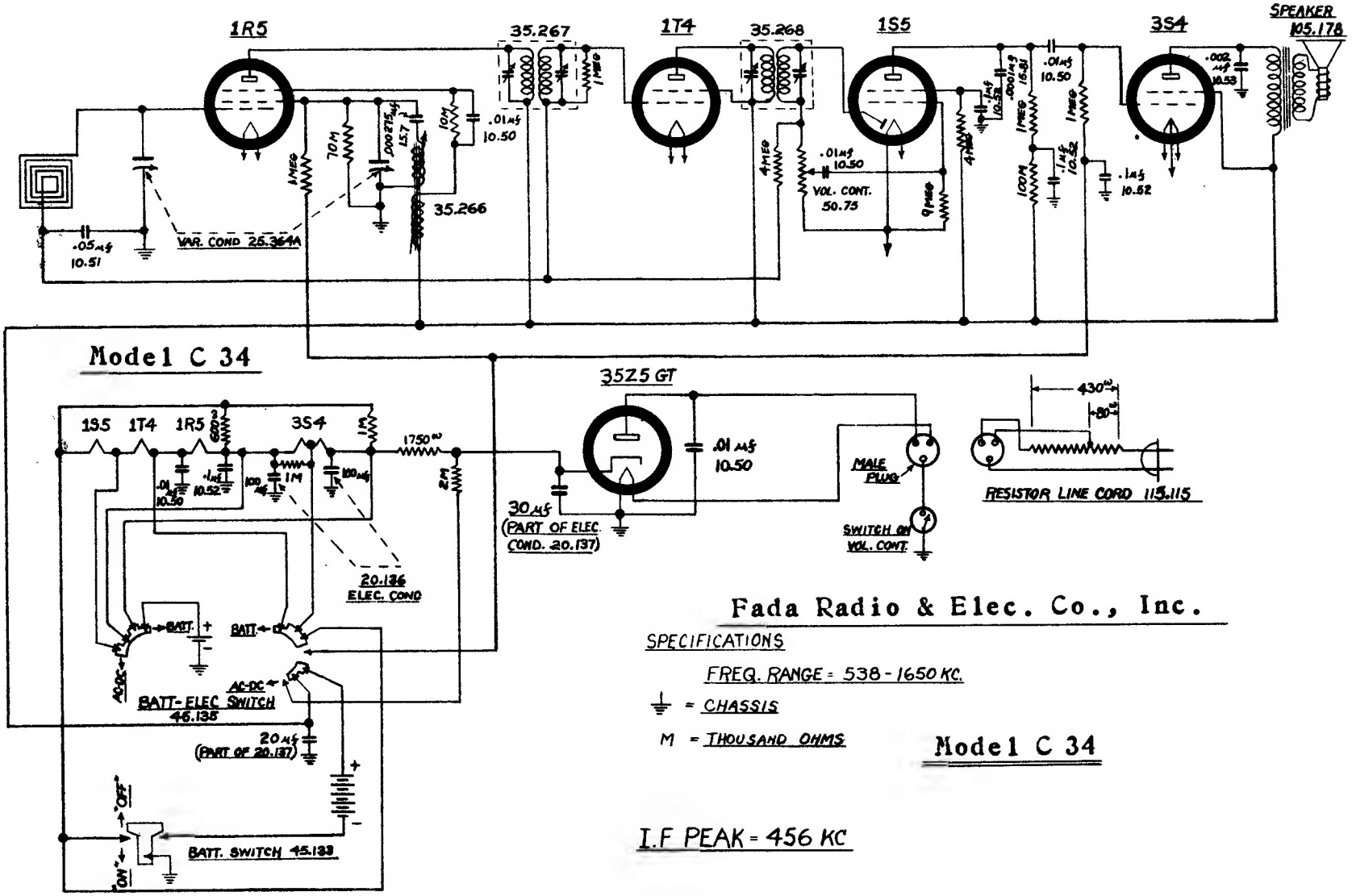

Fada Radio & Elec. Co., Inc.

SPECIFICATIONS

FREQ. RANGE = 538 - 1650 KC.

⏚ = CHASSIS

M = THOUSAND OHMS

Model C 34

I.F PEAK = 456 KC