ALIGNMENT PROCEDURE

(Refer to Chassis View)

- Output meter across 3.2-ohm output load.
- Volume control at maximum.
- Connect ground post of signal generator to B— of radio.
- Align for maximum output. Reduce input as needed to keep output near 0.4 volts.

SIGNAL GENERATOR			*TUNER SETTING*	*ADJUST FOR MAXIMUM OUTPUT (in order shown)*
Frequency	*Dummy Antenna*	*Connection to Radio*		
455 kc	0.1 mf	Stator of antenna section of gang	Rotor full open (plates out of mesh)	Trimmers on output and input I.F. cans
1650 kc	0.1 mf	Stator of antenna section of gang	Rotor full open (plates out of mesh)	Oscillator trimmer C3B
1400 kc	200 mmf	External antenna clip	1400 kc	Antenna trimmer C3A

CHASSIS VIEW

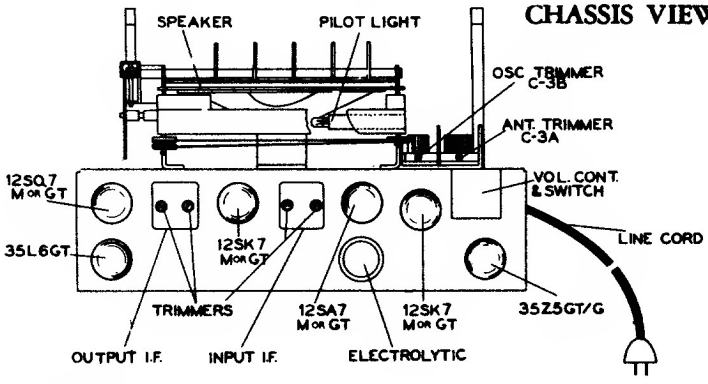
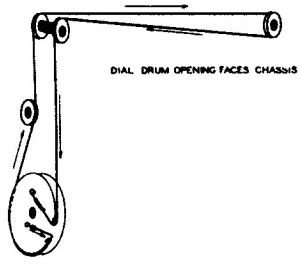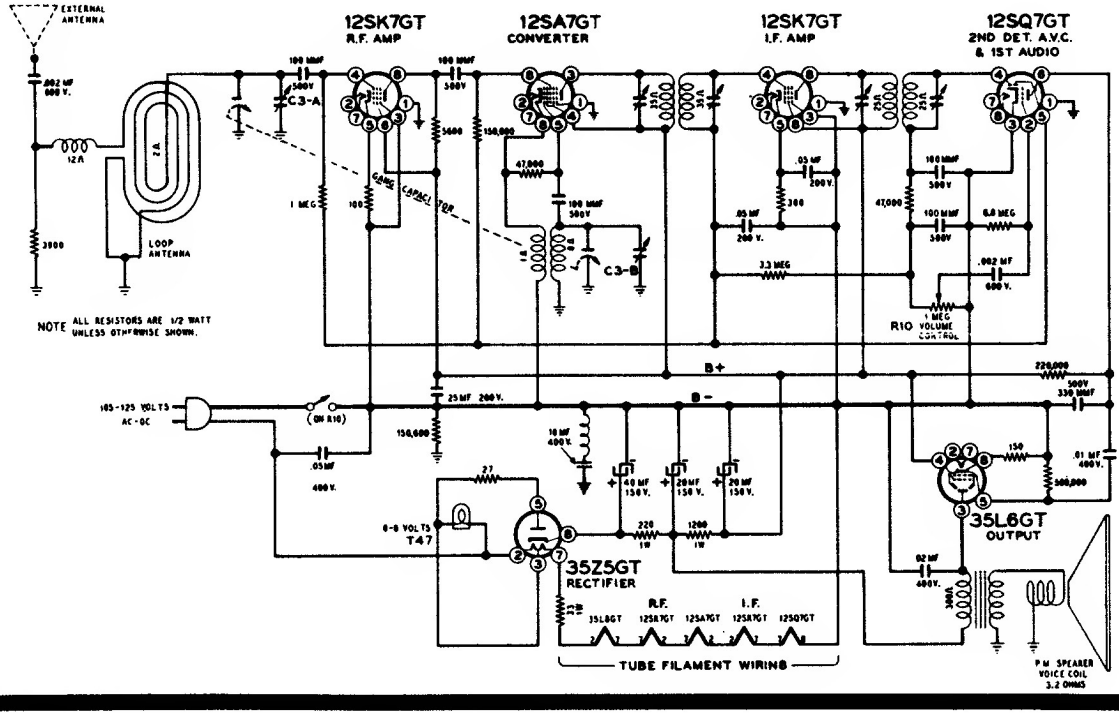
DRIVE CORD REPLACEMENT