GENERAL ELECTRIC

MODELS 129, 131

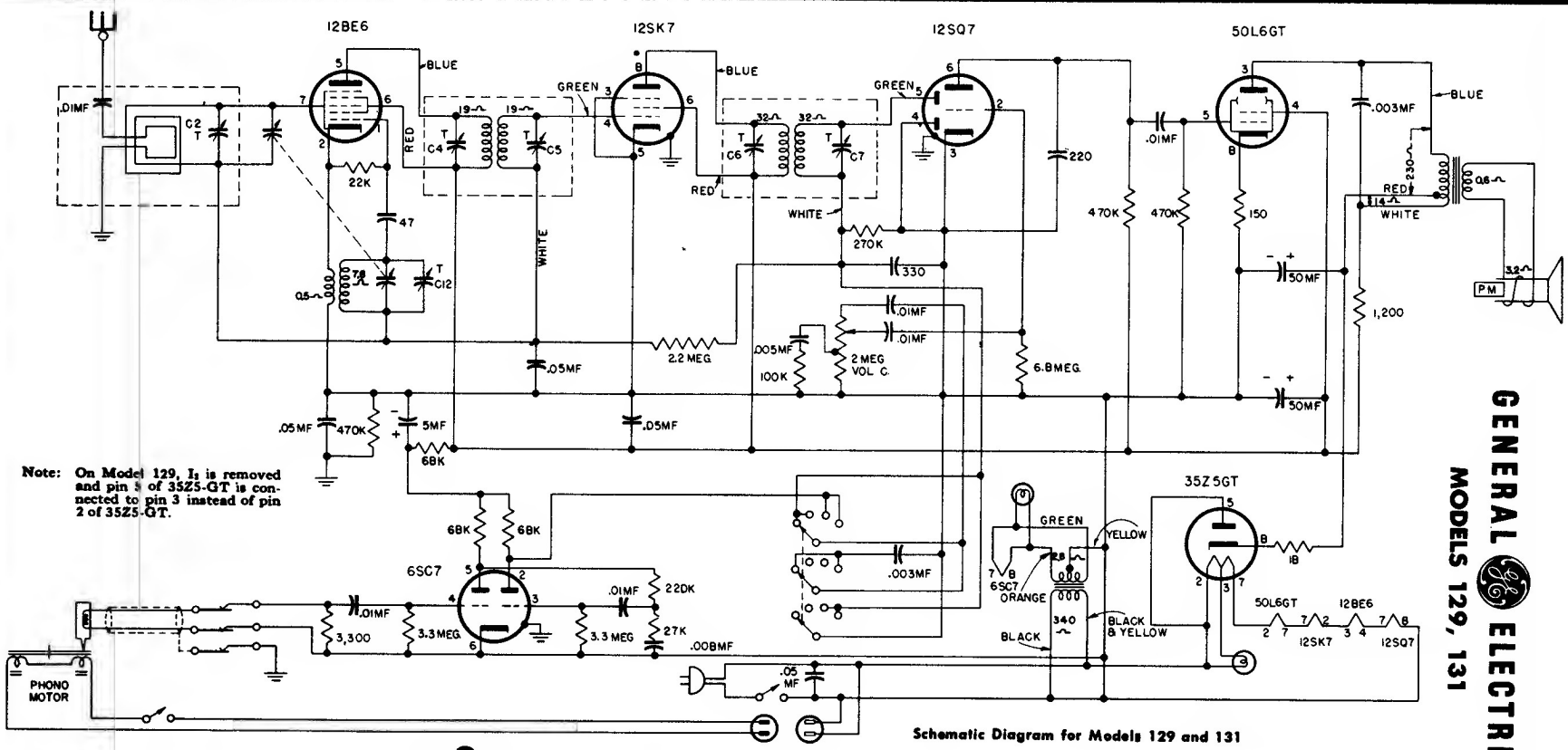

Note: On Model 129, I_2 is removed and pin 5 of 35Z5-GT is connected to pin 3 instead of pin 2 of 35Z5-GT.

Schematic Diagram for Models 129 and 131

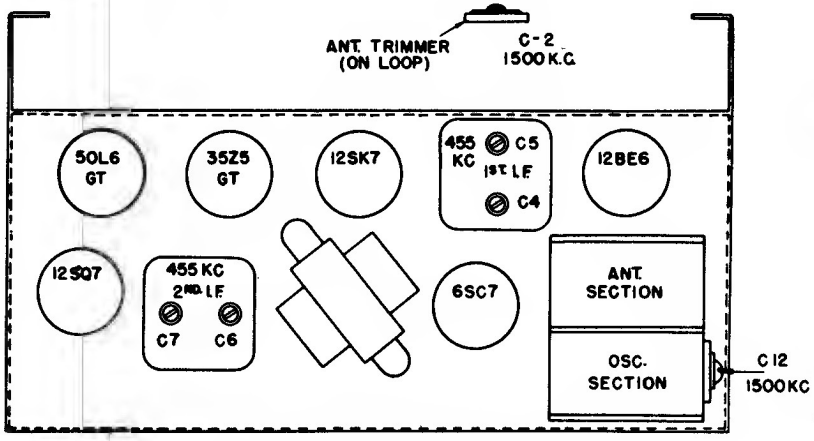

ALIGNMENT CHART

Step	Connect Test-Oscillator To:	Test Oscillator Setting	Dial Setting	Adjust Trimmers For Max. Output
1	12SK7 grid (Pin 4) in series with .05 mf.	455 kc	—	C6 and C7
2	12BE6 grid (Pin 7) in series with .05 mf.	455 kc	—	C4 and C5 Readjust C6 and C7
3	Blue wire on loop in series with 200 mmf. and 470 ohms.	1500 kc	1500 kc	C12 (Osc.); C2 (Ant.)*

* Rock gang condenser when making alignment.