C16, C17, C19, AND C20

The lead identification for the four-section ceramic capacitor RCW-3013 (K67J836) can be observed from the illustration

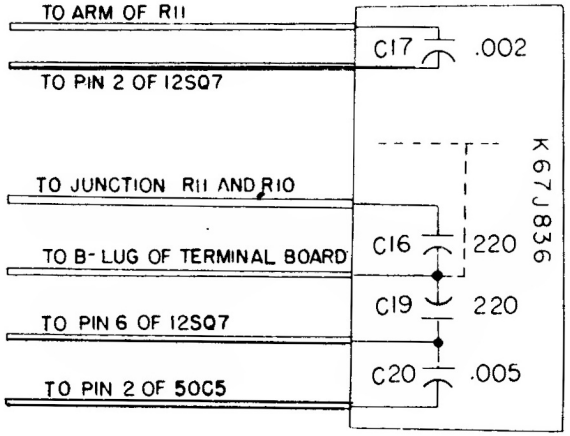

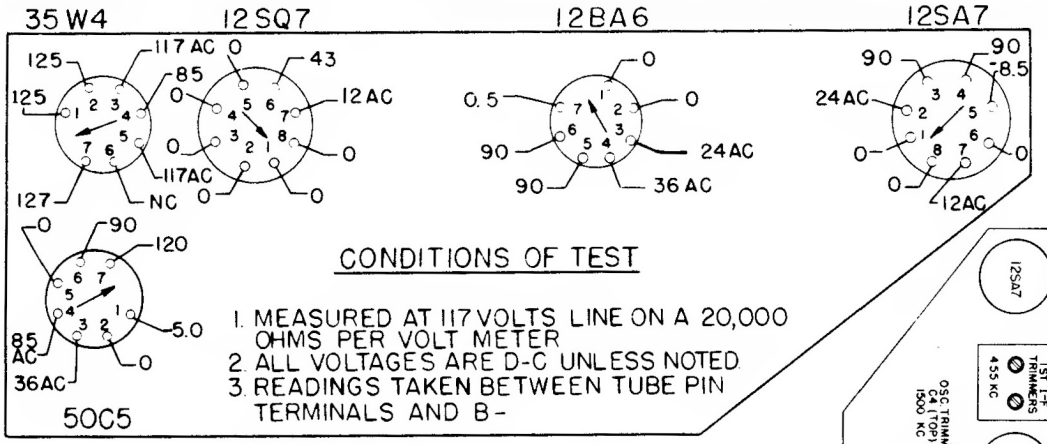

VIEWED FROM BOTTOM OF CHASSIS

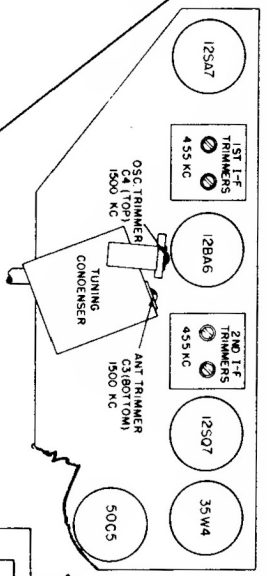

For alignment of the oscillator and antenna trimmers, the input signal should be inductively coupled to the radio loop antenna, L1, by connecting a four-turn, six-inch diameter loop of bell wire across the signal generator output terminals, and then locating the loop to face the radio antenna loop about one foot away.

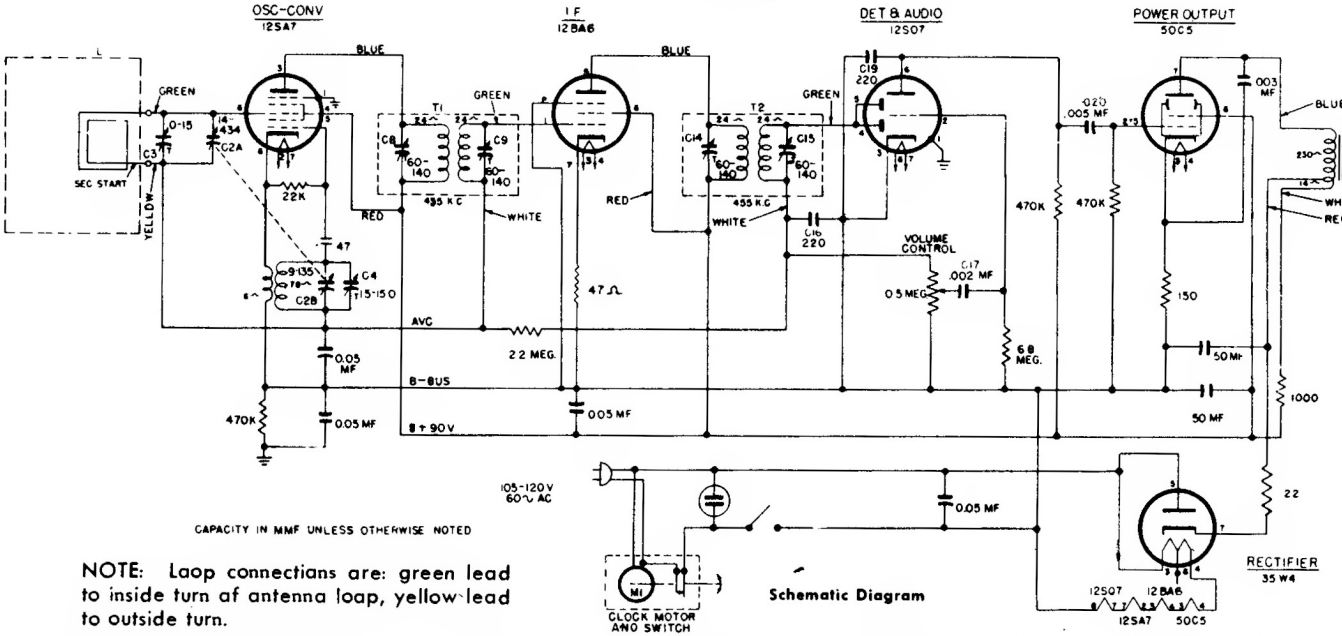

Schematic Diagram

NOTE: Loop connections are: green lead to inside turn of antenna loop, yellow lead to outside turn.

GENERAL ELECTRIC

Service data for Models 509 & 530. A number of other G.E. Clock-Radio models such as: 64, 65, 66, 67, 500, 501, 505, 506, 507, & 508 are almost identical to Model 509 and 530.