# GENERAL ELECTRIC
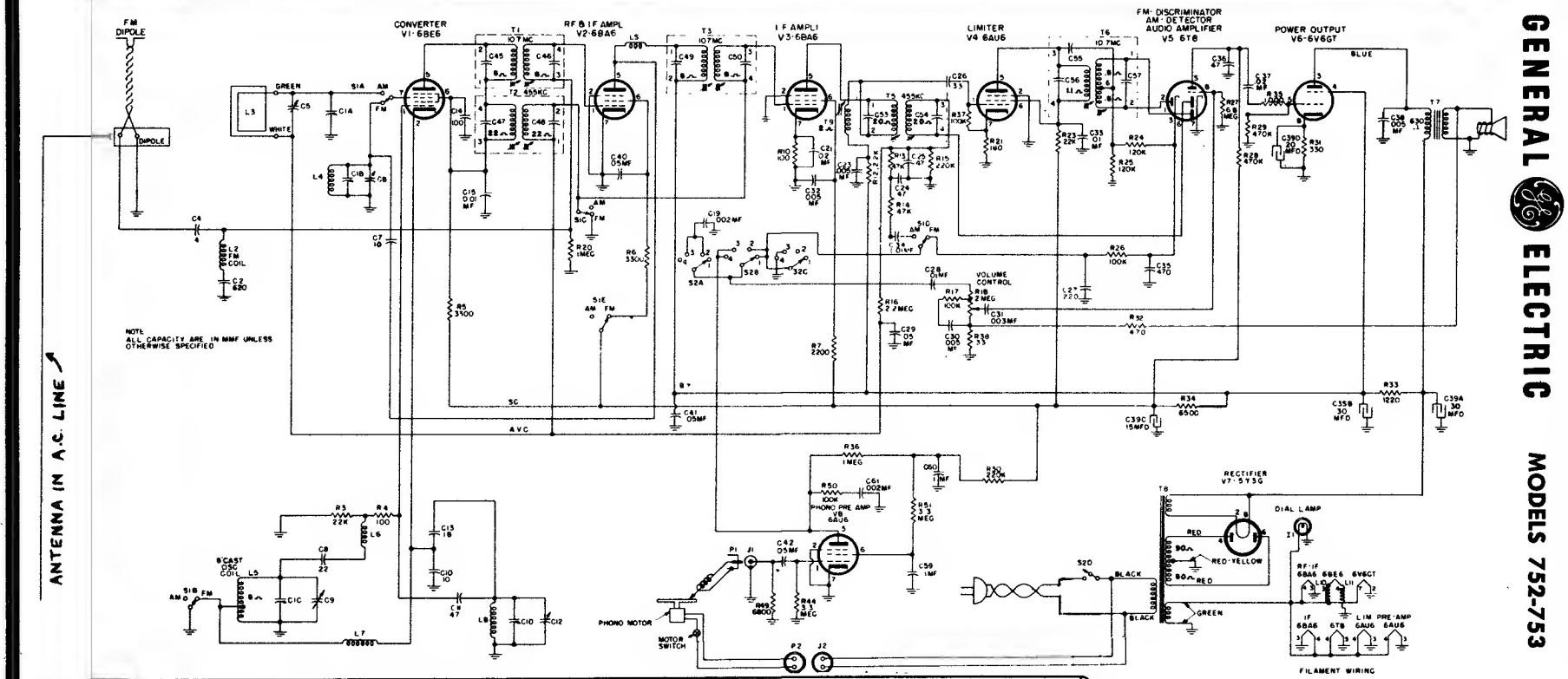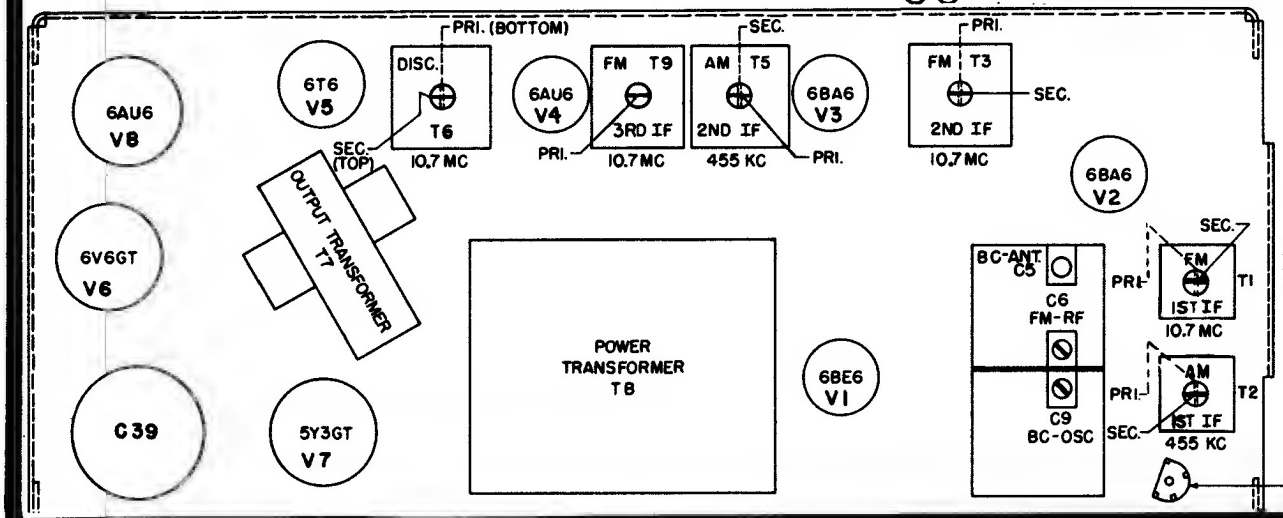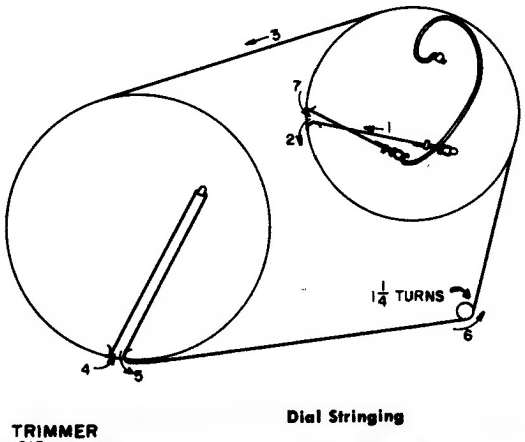
## MODELS 752-753