GENERAL ELECTRIC

MODELS 754 & 756
AM–FM RADIO–PHONOGRAPH

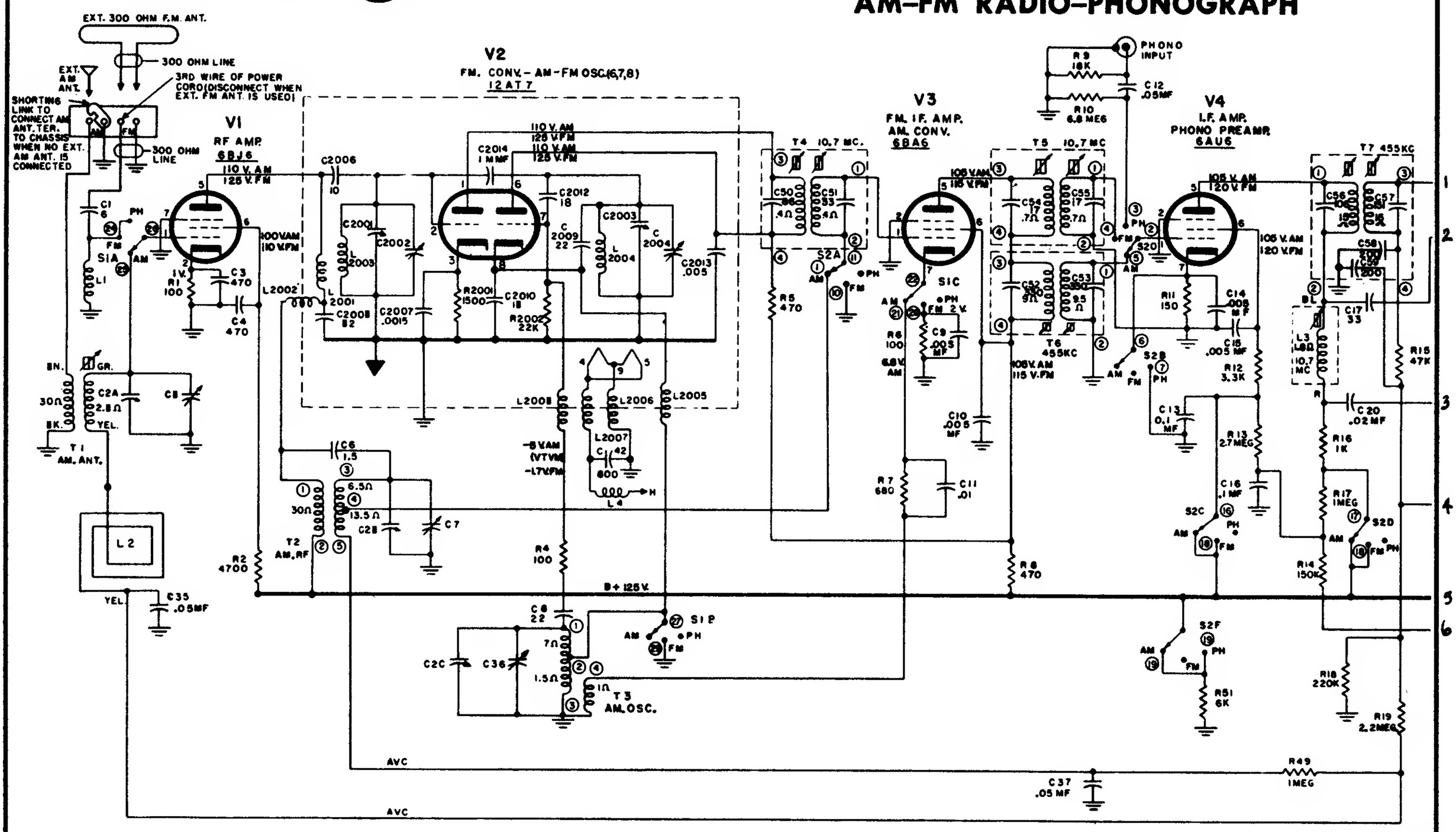

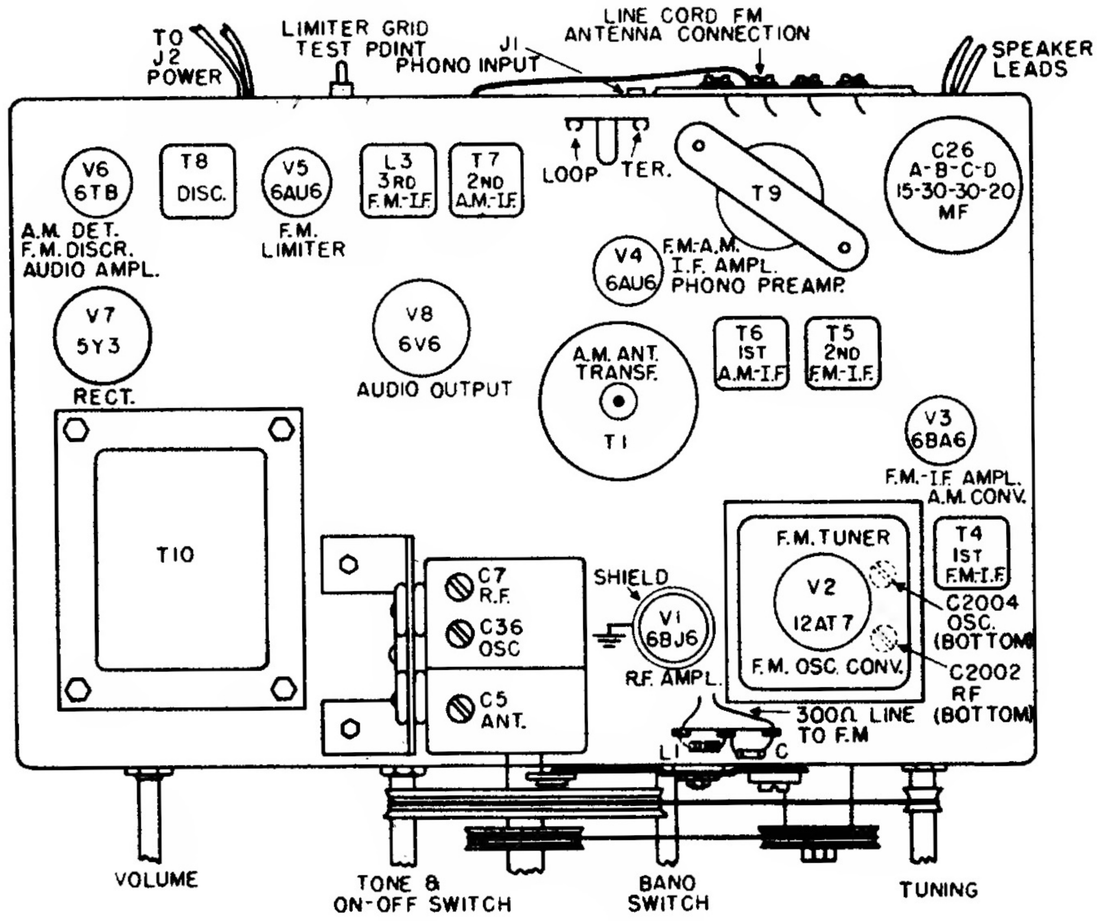

TOP VIEW

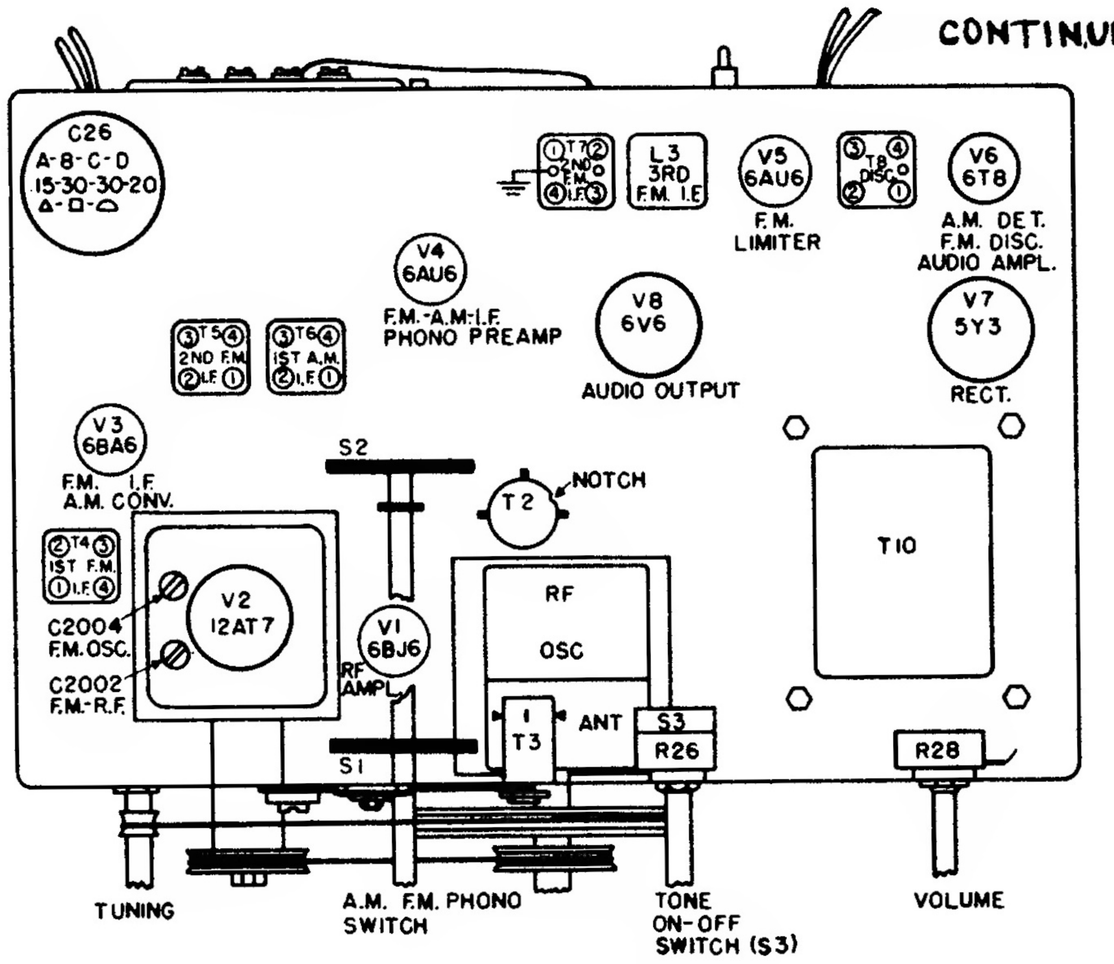

BOTTOM VIEW

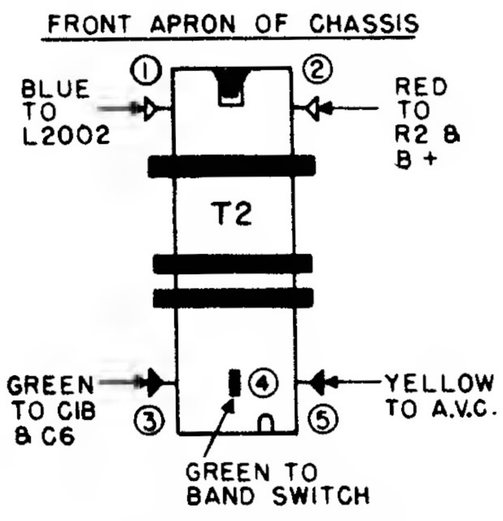

R.F. TRANSF. CONNECTIONS

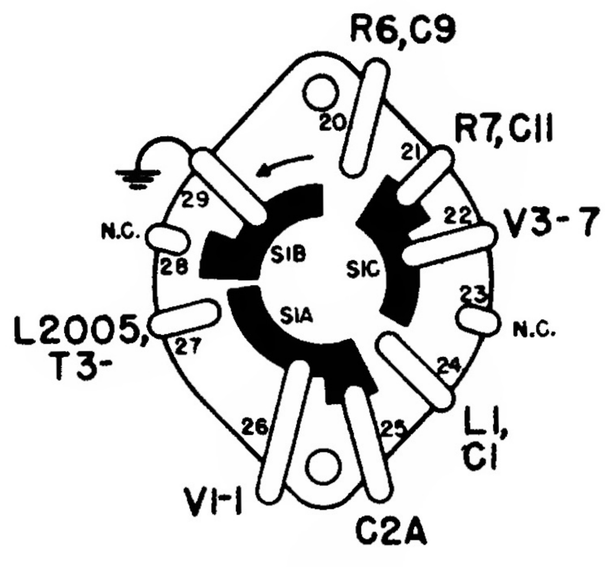

AM POSITION

FRONT WAFER REAR VIEW

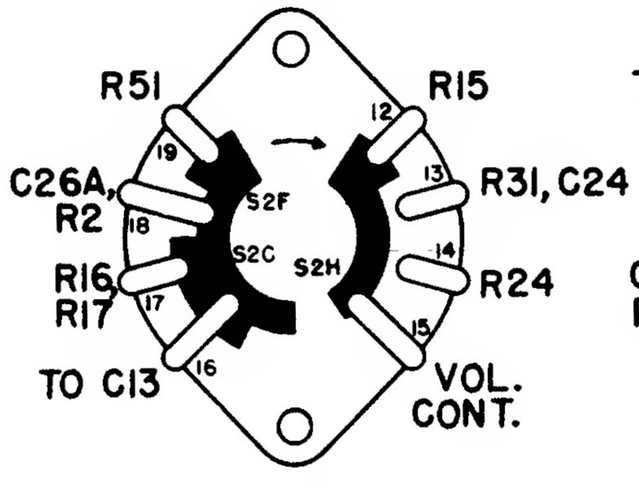

AM POSITION

REAR WAFER FRONT VIEW

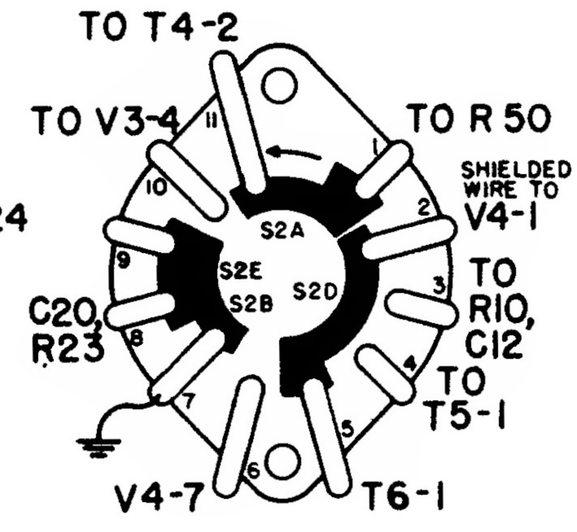

AM POSITION

REAR WAFER REAR VIEW

GENERAL ELECTRIC

MODELS 754 & 756

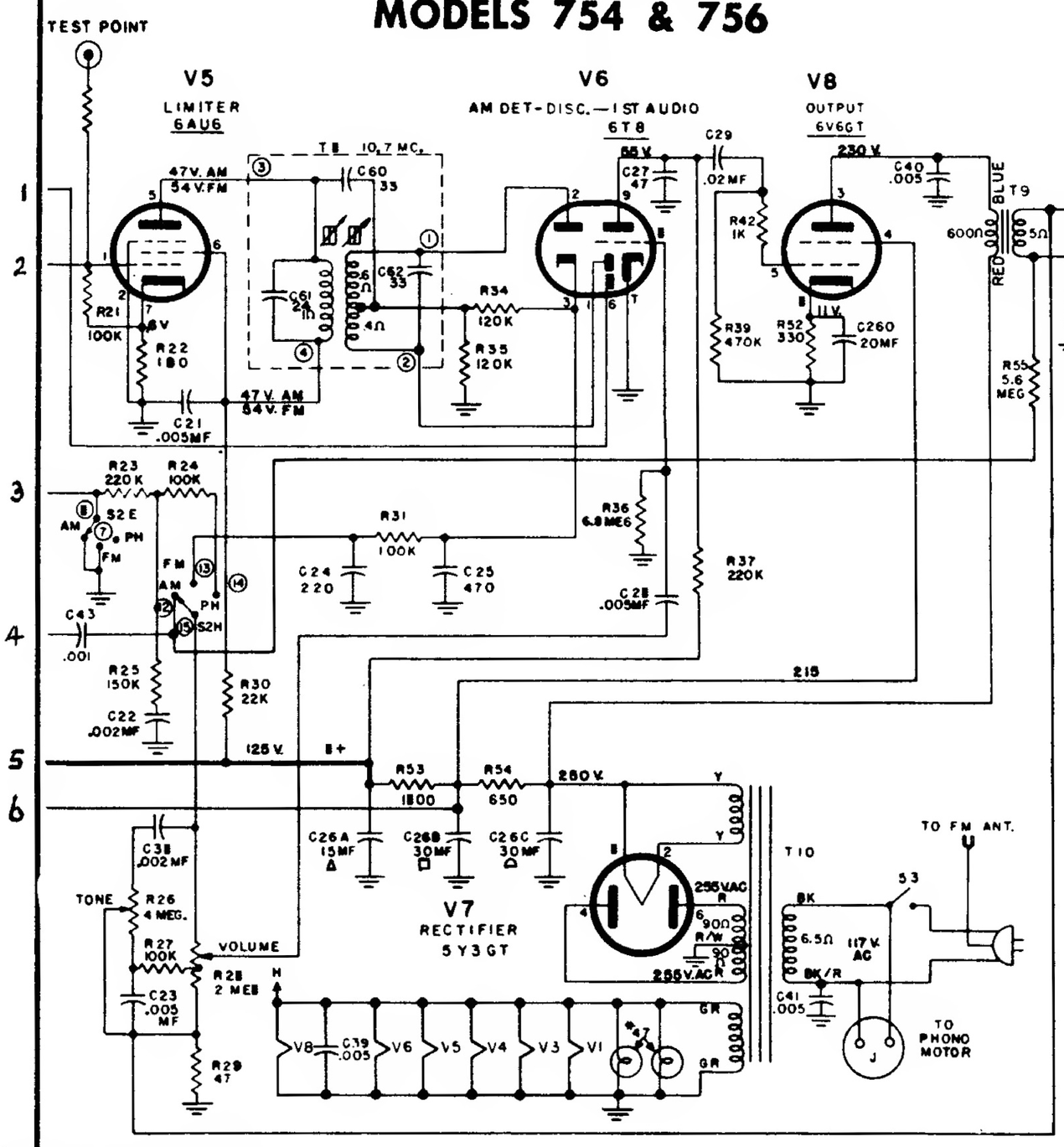

CONTINUED

METER ALIGNMENT NOTES

1. Connect an output meter across the speaker leads to indicate maximum output.
2. Turn volume control to maximum clockwise position and reduce signal input so that output meter does not indicate more than ½ watt output.
3. Band switch set in AM position.
4. Connect an 18 microhenry choke across the loop terminals to assimilate the loop during alignment.
5. Connect a vacuum tube voltmeter from the limiter grid test point to chassis to read the d-c voltage developed at the limiter grid during FM-IF and RF alignment. Dress the leads to the vacuum tube voltmeter leads away from the r-f end of the chassis to prevent regeneration. Reduce signal input so that V.T.V.M. reads approximately 1 volt d-c at limiter grid test point.
6. Connect a vacuum tube voltmeter across the volume control and align the secondary of T8 for zero output at 10.7 mc.
7. Detune the signal generator either side of 10.7 mc until maximum d-c volts across the volume control is read—then peak the primary core of T8.
8. For FM-RF alignment the output impedance of the signal generator cable should be 300 ohms to properly match the input impedance of this receiver.
9. The cover over the FM-RF tuner must be in place during FM-RF alignment.
10. Band switch in FM position.
11. Make the chassis connection as close to the signal input point as possible.

OSC. TRANSF. CONNECTIONS

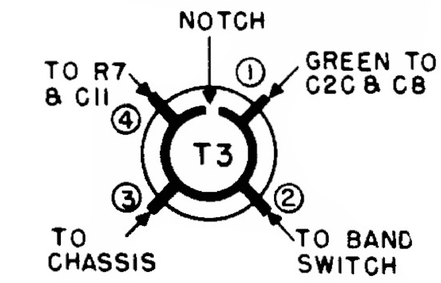

EQUIPMENT REQUIRED

1. Signal generator
2. Vacuum tube voltmeter
3. Output meter
4. One 18 microhenry choke
5. .02 mf capacitor
6. 100 mmf capacitor

NOTE: ALL RESISTANCES IN OHMS UNLESS OTHERWISE DESIGNATED
ALL CAPACITANCES GIVEN IN MICRO-MICROFARADS UNLESS OTHERWISE DESIGNATED
VOLTAGES ARE PLUS OR MINUS 20% TOLERANCE
VOLTAGES MEASURED WITH A V.T.V.M. OR 20,000 OHM PER VOLT METER

METER ALIGNMENT CHART

Step No.	Signal Generator Frequency	Signal Input Point Between	Tuning Gang Capacitor	Adjust	See Note No.
		AM-IF ALIGNMENT			
1	455 KC 30% mod. with 400 cycles	Pin 1 of V4 (6AU6) thru .02 mf. and chassis	Closed	Primary and secondary cores of T7 for max. output meter reading	1, 2, 3
2		Pin 1 of V3 (6BA6) thru .02 mf. and chassis		Primary and secondary cores of T6 for max. output meter reading. Recheck adjustment of T7 cores	
		AM-RF ALIGNMENT			
3	1620 KC 30% mod. with 400 cycles	Pin 1 of V1 (6BJ6) thru .02 mf. and chassis	AM gang cap. fully open. (Min. cap.)	Adjust oscillator trimmer (C36) for maximum output meter reading.	1, 2, 3
4	1500 KC 30% mod. with 400 cycles		Tuning gang for max. output meter reading.	Adjust r-f trimmer (C7) for maximum output meter reading while rocking gang condenser.	
5	580 KC 30% mod. with 400 cycles	AM antenna terminals thru I. R. E. dummy antenna		Core of T1 for maximum	1, 2, 3, 4
6	1500 KC 30% mod. with 400 cycles			Adjust antenna trimmer C5 for maximum	
		FM-IF ALIGNMENT CHART			
7	10.7 mc unmodulated	Pin 1 of V4 (6AU6) thru 100 mmf. and chassis	Closed	Core of L3 for max. d-c voltage at test point on rear of chassis	5, 10, 11
8		Pin 1 of V3 (6BA6) thru 100 mmf. and chassis		Cores of T5 for max. d-c volts at limiter test point	
9		Stator of C2001 thru 100 mmf. thru hole in bottom of tuner cover		Cores of T4 for max. d-c volts at limiter test point	
		FM DISCRIMINATOR ALIGNMENT			
10	10.7 mc unmodulated	Pin 1 of V4 thru 100 mmf. and chassis	Closed	T8 secondary core for zero output across the volume control R28 at 10.7 mc	6, 10, 11
11	Detune for max. d.c. at R28. See Note 7.			T8 primary core for max. d-c volts across the volume control R28	6, 7, 10, 11
		FM-RF ALIGNMENT			
12	108.5 mc	At FM antenna terminals	Tuning capacitor fully open	Oscillator trimmer C2004 for maximum d-c voltage at limiter grid test point.	5, 8, 9, 10, 11
13	108 mc		Tune for maximum	FM-RF trimmer C2002 for max. output at limiter grid test point while rocking signal generator	
14	Recheck oscillator alignment as in Step 12.				