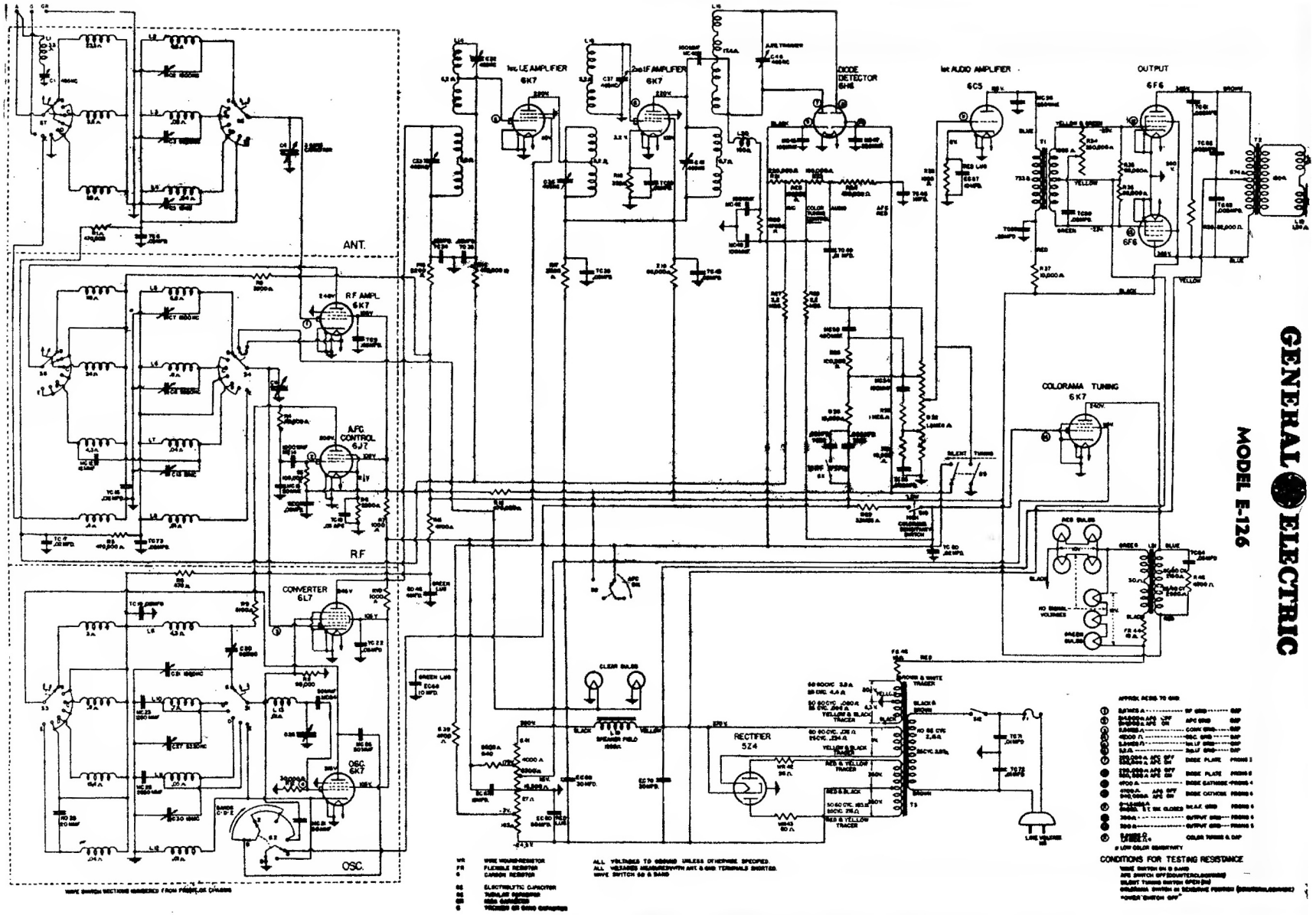
GENERAL ELECTRIC
MODEL E-126
ANT.
R.F.
OSC.
R.F AMPL. 6K7
AFC CONTROL 6J7
CONVERTER 6L7
OSC. 6K7
1st I.F. AMPLIFIER 6K7
2nd I.F. AMPLIFIER 6K7
DIODE DETECTOR 6H6
1st AUDIO AMPLIFIER 6C5
OUTPUT 6F6
COLORAMA TUNING 6K7
RECTIFIER 5Z4
CLEAR BULBS
CONDITIONS FOR TESTING RESISTANCE