INSTRUCTIONS

GENERAL ELECTRIC

Model JB-410

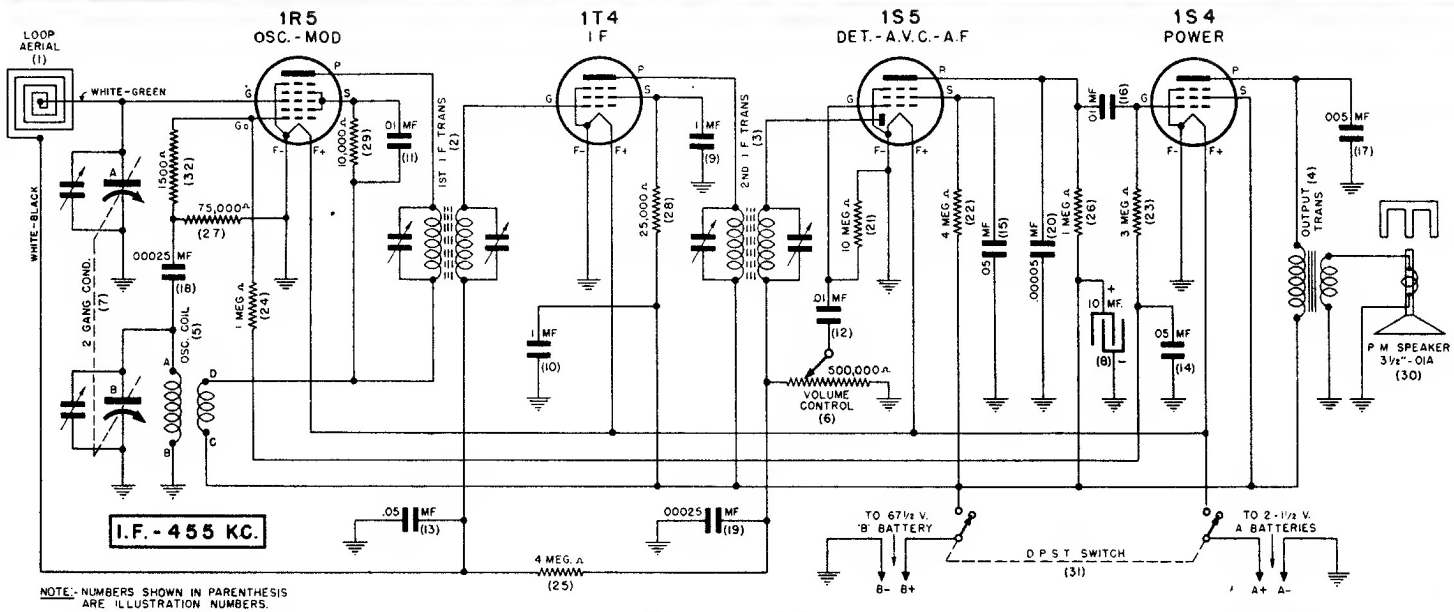

NOTE:- NUMBERS SHOWN IN PARENTHESIS ARE ILLUSTRATION NUMBERS.

VOLTAGE TABLE

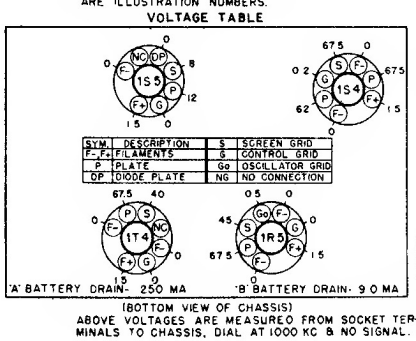

SYM.	DESCRIPTION	S	SCREEN GRID
F-, F+	FILAMENTS	G	CONTROL GRID
P	PLATE	Go	OSCILLATOR GRID
OP	DIODE PLATE	NG	NO CONNECTION

(BOTTOM VIEW OF CHASSIS)
ABOVE VOLTAGES ARE MEASURED FROM SOCKET TERMINALS TO CHASSIS, DIAL AT 1000 KC & NO SIGNAL.

TOP VIEW OF CHASSIS

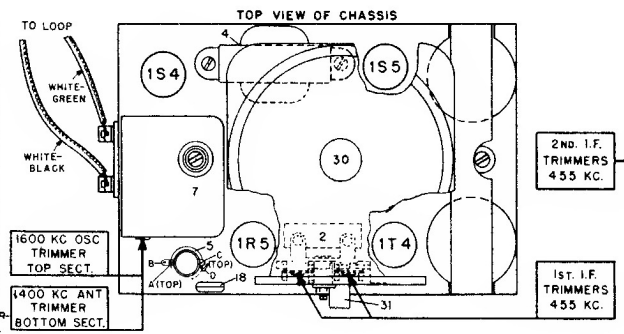

BOTTOM VIEW OF CHASSIS

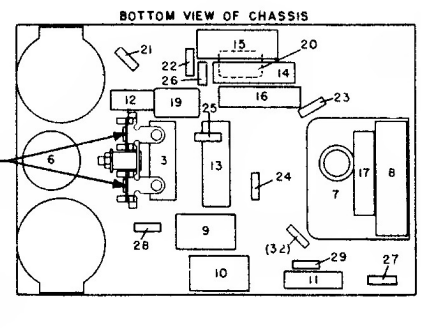

Alignment Frequencies I.F. .....455 K.C.
R.F. .....1600 & 1400 K.C.

I.F. Alignment

Connect an output meter across the voice coil. Rotate the volume to maximum. Set test oscillator to 455 K.C. and apply **signal to lug on** stator of gang condenser to which loop is connected through a .05 Mfd. capacitor. Align the second I.F. transformer trimmers, next adjust the first I.F. transformer trimmers. Keep test oscillator output as low as a readable meter reading will permit.

R.F. Alignment

Couple test oscillator output to loop in case cover. Adjust test oscillator and receiver dial to exactly 1600 K.C. Peak 1600 K.C. oscillator trimmer for maximum output. Change test oscillator signal and receiver dial to approximately 1400 K.C. Then while rocking gang condenser trim 1400 K.C. antenna trimmer for maximum output.