12AU7 7247 7591A x2

REVERB DRIVER AMP

4.7K

50mF

1.

380

100K

100K

1K

400

220K

56K

100pF

.02

.027

470K

470K

10K

49K

1K

.1

450

420

220K

1K

TP

33K

33K

220K

BIAS BAL.

10a

10a

TP

800Ω

WHT

.047

10K

220K

100mF

1.2K

100K

220pF

82K

2.7K

100mF

150

2.7K

470K

50mF

.1

1K

40mF

WHT

OUTPUT 18V. 40 WATTS

BRN

1K

1.8K

.001

B+

5AR4

HT

6CA4

B+

450

640Ω

300

REVERB AMP.

-21

30

100mF

4.7K

100mF

5.6K

6.3V FILAMENTS

HAMMOND ORGAN

MAIN AMPLIFIER PAGE 1

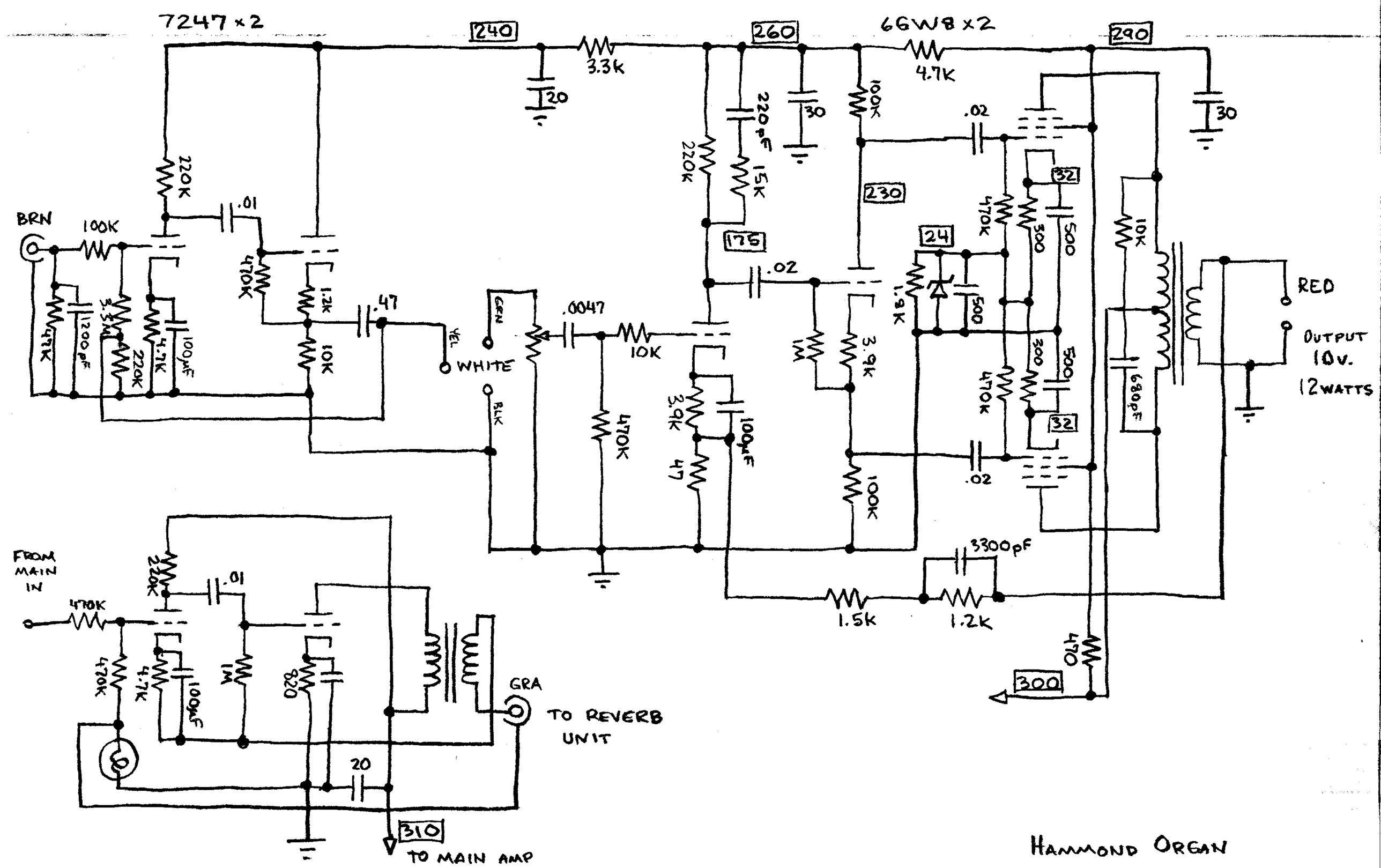

HAMMOND ORGAN

REVERB AMPLIFIER PAGE 2