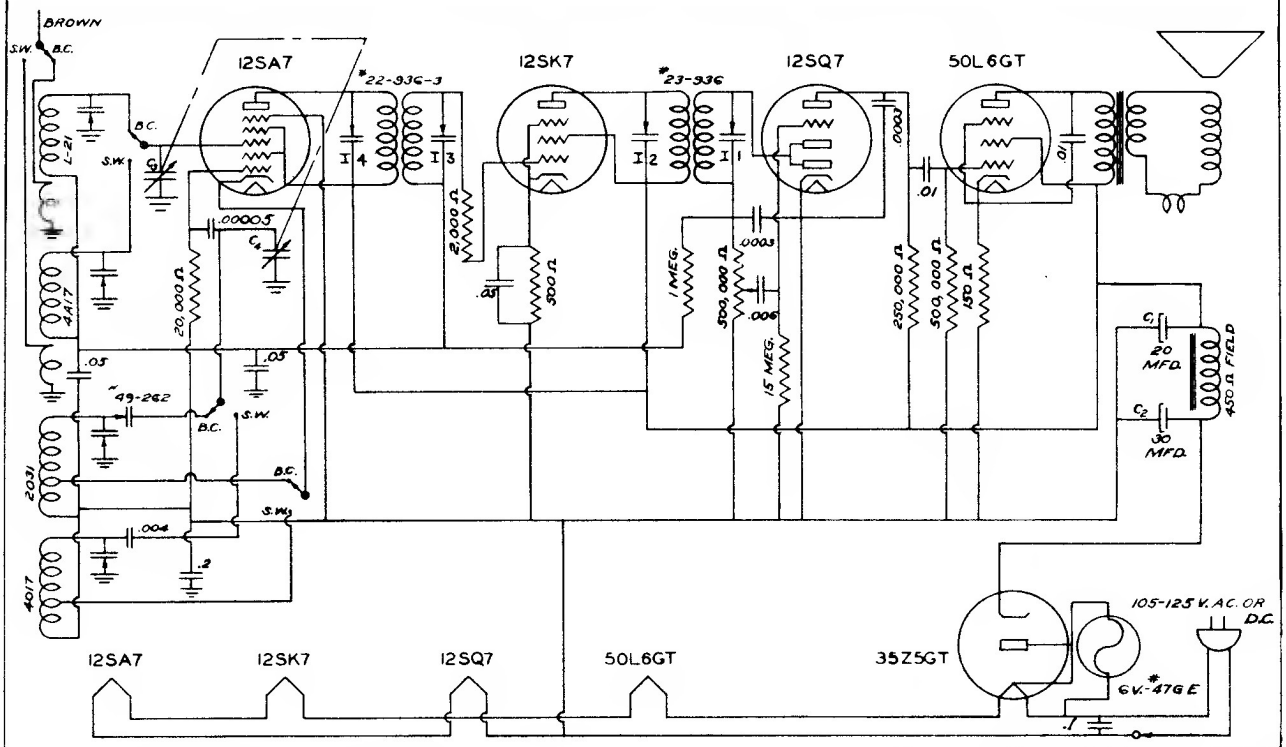

C, C2-20, 30 MFD.-150, 150 V.-NO. 47-266.
C3, C4-VARIABLE CONDENSER-NO. 63-270.
VOLUME CONTROL AND SWITCH-NO. 69-281

I. F.-465 K. C.

HOWARD RADIO CO.
MODEL 702

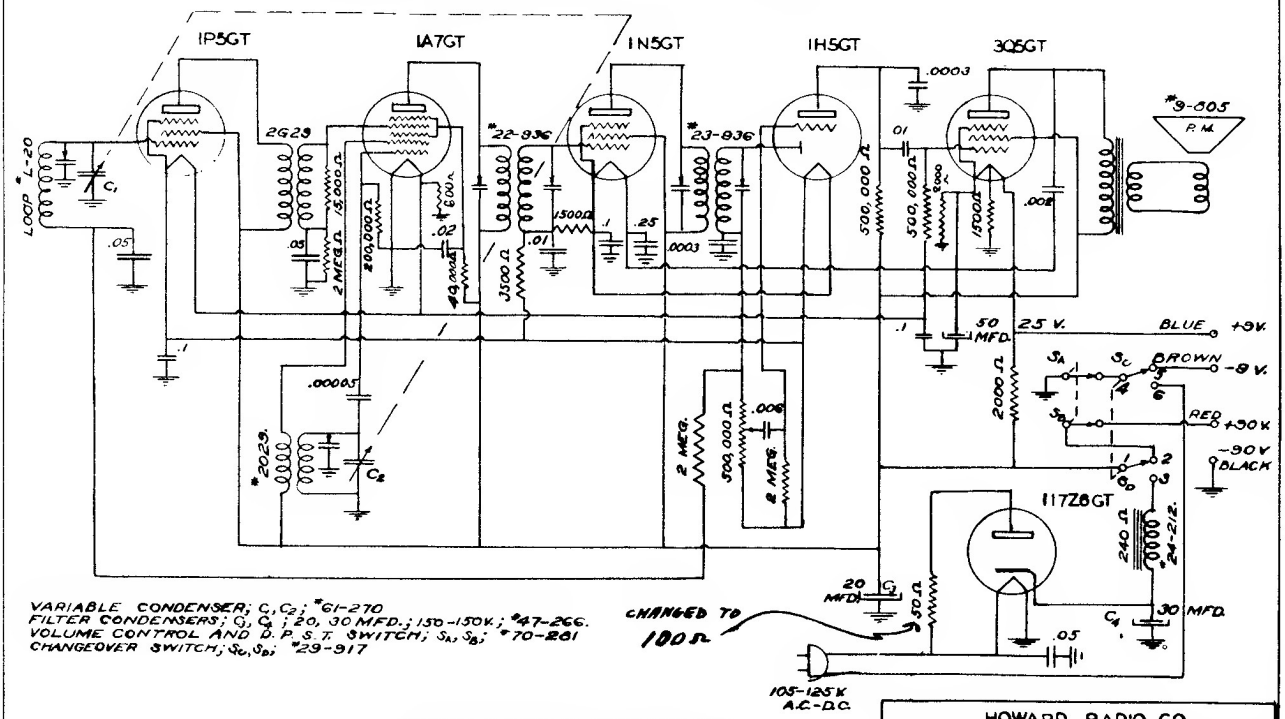

VARIABLE CONDENSER; C1, C2; #61-270
FILTER CONDENSERS; C3, C4; 20, 30 MFD.; 150-150V.; #47-266.
VOLUME CONTROL AND D. P. S. T. SWITCH; S4, S5; #70-281
CHANGEOVER SWITCH; S6, S7; #29-917

SWITCH SHOWN IN POSITION FOR BATTERY OPERATION. FOR A. C. OR D. C. OPERATION, SWITCH CONNECTS TERMINAL 4 TO 6 AND 1 TO 3.

HOWARD RADIO CO.
MODEL 14ACB

I. F. 465 K. C.