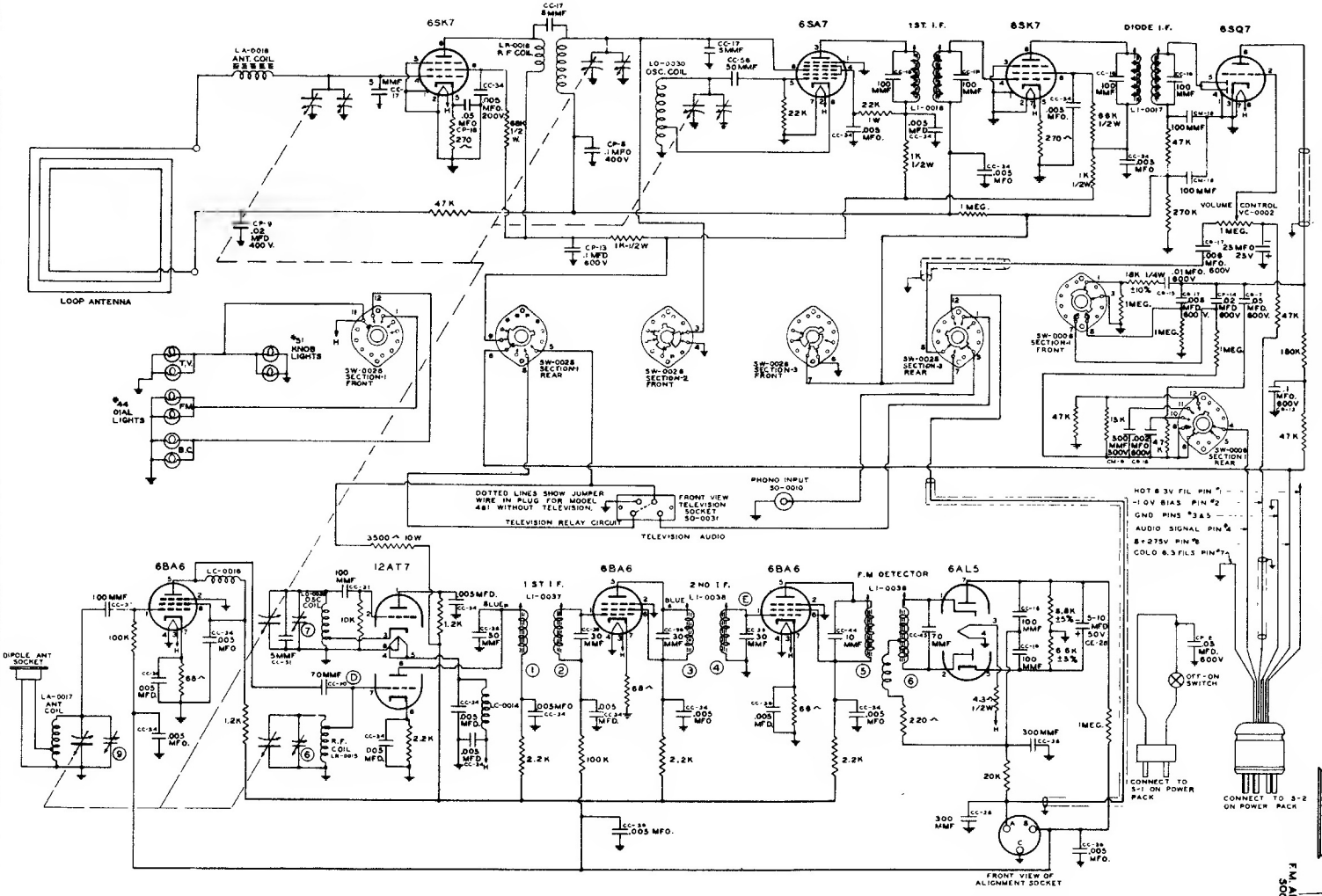

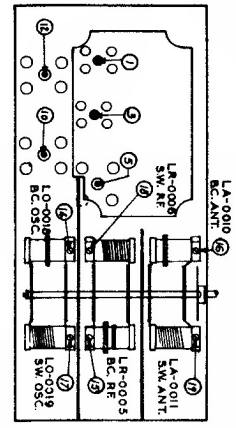

BOTTOM VIEW

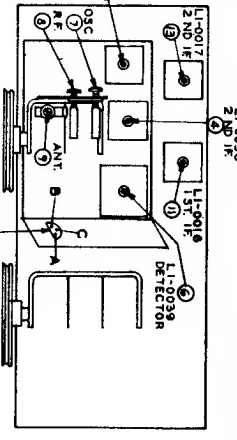

TOP VIEW

TRIMMER LOCATION CHARTS

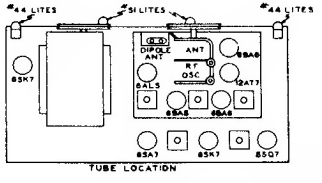

TUBE LOCATION

NOTES—

1 SW-0028 - THREE SECTION-FOUR POSITION BAND SWITCH, SHOWN IN POSITION NO.1
NO.1 POSITION IS PHONO NO.3 POSITION IS F.M.
NO.2 POSITION IS RADIO BROADCAST NO.4 POSITION IS TELEVISION

2 SW-0008 ONE SECTION - FIVE POSITION TONE SWITCH SHOWN IN "FULL" POSITION

3 ALL SWITCH SECTIONS SHOWN IN COUNTER-CLOCKWISE POSITION AS VIEWED FROM KNOB END OF SHAFT

4 RESISTORS ARE 20% - 1/4W UNLESS OTHERWISE SPECIFIED.

5 "K" = 1000 OHMS

HOWARD RADIO

MODEL 481-A (Chassis)

The HOWARD 481-A Chassis, is essentially the same as the 481-M, 481-B and 481-C, the only difference is that the Short Wave is not included in this model.