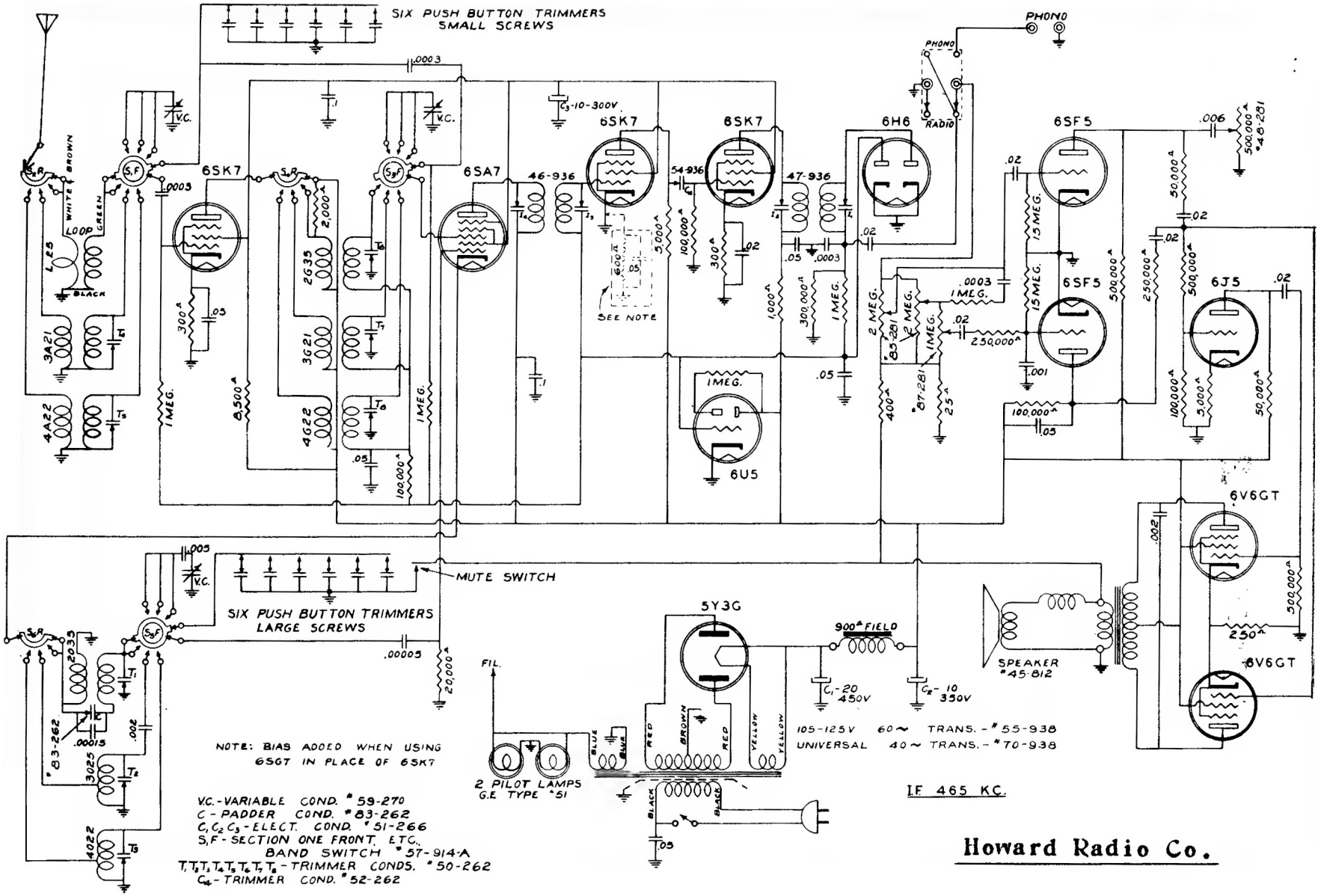

RADIO CHASSIS MODEL 718 SERIES X