DIAGRAM OF MAJESTIC SCREEN GRID SUPERHETERODYNE
AUTOMATIC VOLUME CONTROL RECEIVER MODEL 290 — 115 VOLTS 50-60 CYCLE

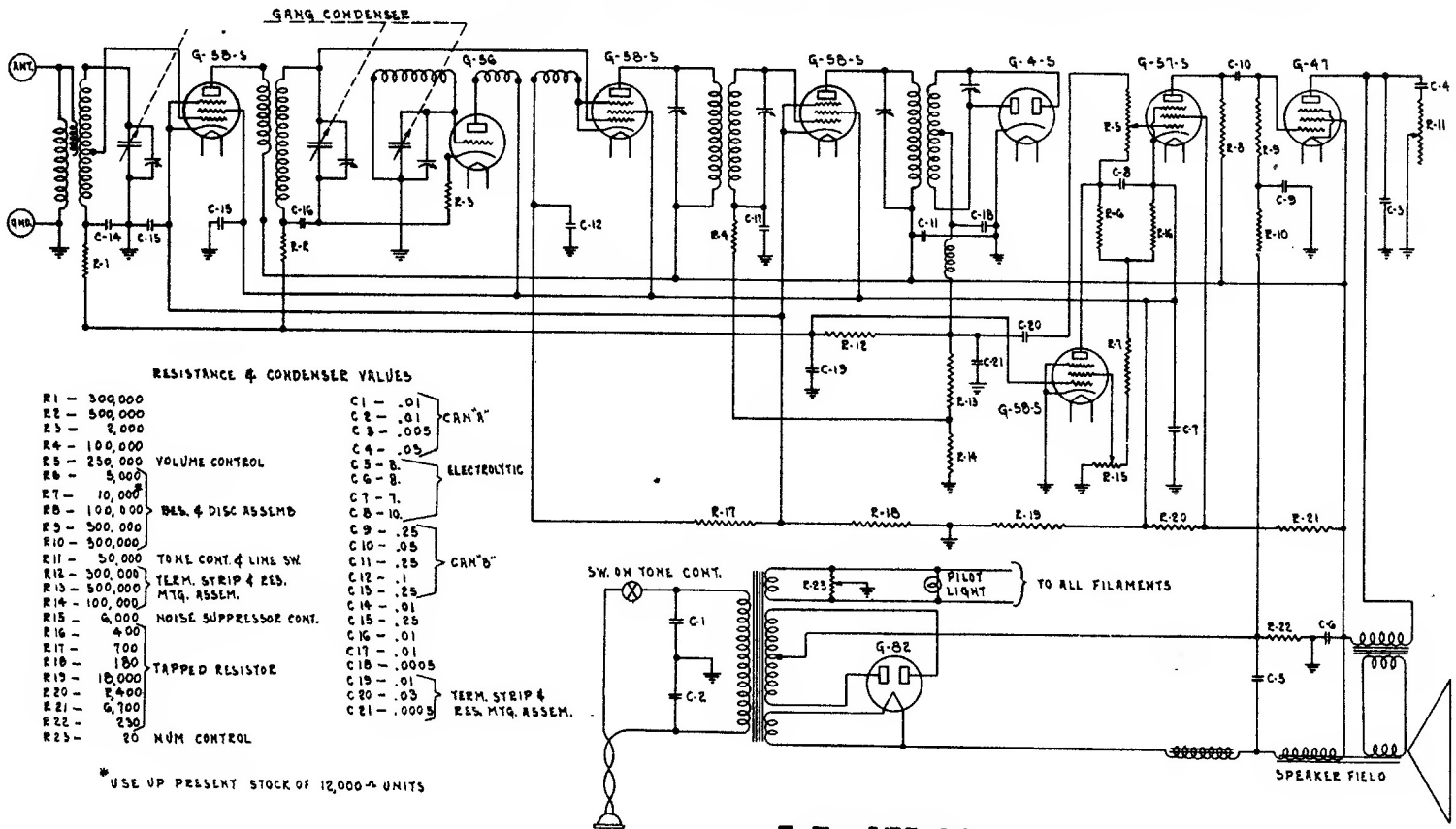

RESISTANCE & CONDENSER VALUES

R1 — 300,000		
R2 — 500,000		
R3 — 2,000		
R4 — 100,000		
R5 — 250,000	VOLUME CONTROL	
R6 — 5,000*		
R7 — 10,000*		
R8 — 100,000	RES. & DISC ASSEMB	
R9 — 500,000		
R10 — 500,000		
R11 — 50,000	TONE CONT. & LINE SW.	
R12 — 500,000	TERM. STRIP & RES. MTG. ASSEM.	
R13 — 500,000		
R14 — 100,000		
R15 — 6,000	NOISE SUPPRESSOR CONT.	
R16 — 400		
R17 — 700		
R18 — 180	TAPPED RESISTOR	
R19 — 18,000		
R20 — 2,400		
R21 — 6,700		
R22 — 230		
R23 — 20	HUM CONTROL	

C1 — .01	CAN "A"
C2 — .01	
C3 — .005	
C4 — .05	
C5 — 8.	ELECTROLYTIC
C6 — 8.	
C7 — 7.	
C8 — 10.	
C9 — .25	CAN "B"
C10 — .05	
C11 — .25	
C12 — .1	
C13 — .25	
C14 — .01	
C15 — .25	
C16 — .01	
C17 — .01	
C18 — .0005	
C19 — .01	TERM. STRIP & RES. MTG. ASSEM.
C20 — .03	
C21 — .0005	

*USE UP PRESENT STOCK OF 12,000 Ω UNITS

I.F. 175 KC.