SCHEMATIC DIAGRAM MODEL TR321-A TR331-A

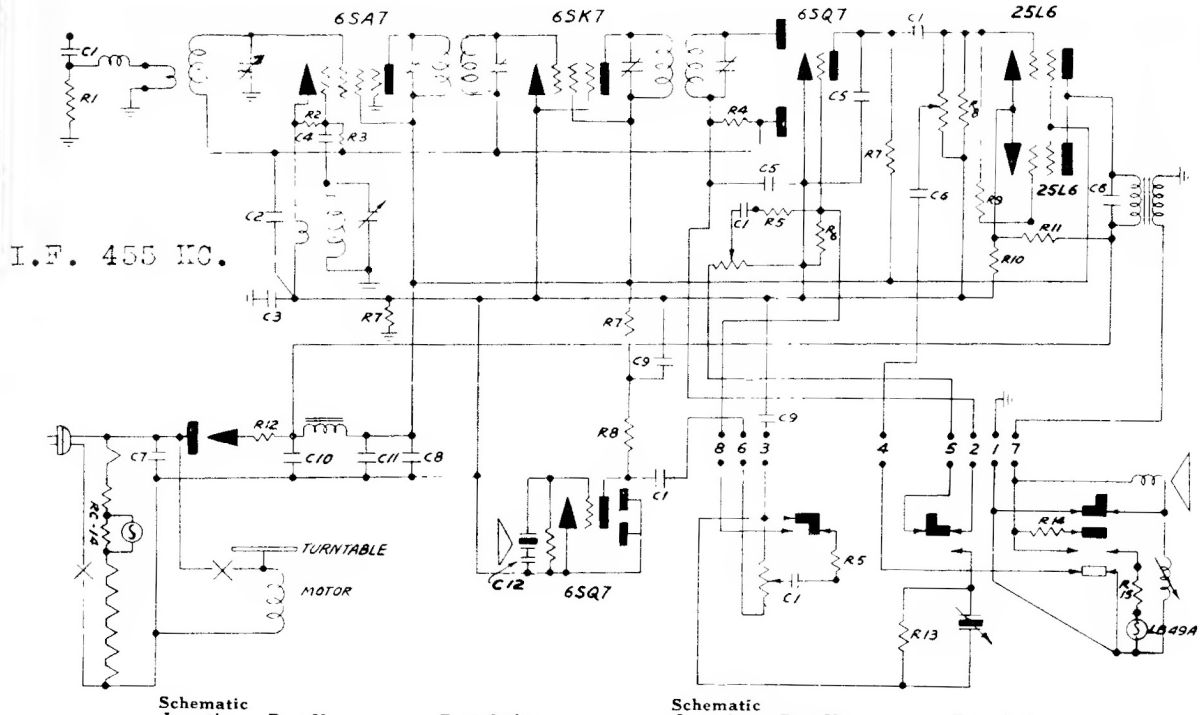

Schematic Location	Part No.	Description
R1	R-15570	2K ohm ¼ Watt Resistor 20%
R2	R-15510	20K ohm ¼ Watt Resistor 20%
R3	R-79	15 Megohm ¼ Watt Resistor 20%
R4	R-15500	2 Megohm ¼ Watt Resistor 20%
R5	R-15504	150K ohm ¼ Watt Resistor 20%
R6	R-149	4.7 Megohm ¼ Watt Resistor 20%
R7	R-153	270K ohm ¼ Watt Resistor 20%
R8	R-154	470K ohm ¼ Watt Resistor 20%
R9	R-15601	100 ohm ¼ Watt Resistor 20%
R10	R-155	68 ohm 1 Watt Resistor 20%
R11	R-147	4K ohm 3 Watt Resistor 20%
R12	R-85	35 ohm 1 Watt Resistor 20%
R13	R-100	300K ohm ¼ Watt Resistor 20%
R14	R-152	4 ohm 1 Watt Resistor 20%
R15	R-151	7.5 ohm 1 Watt Resistor 20%
RC-14	RC-14	Candohm
C1	C-15754	.01 mfd. 400 Volt Condenser
C2	C-15752	.05 mfd. 200 Volt Condenser
C3	C-15770	.2 mfd. 200 Volt Condenser
C4	CM-29	50 mmfd Mica Condenser
C5	CM-30	250 mmfd. Mica Condenser
C6	C-25	.006 mfd. 400 Volt Condenser
C7	C-15756	.05 mfd. 400 Volt Condenser
C8	C-15751	.25 mfd. 200 Volt Condenser
C9, C12	C-15761	.10 mfd. 200 Volt Condenser
C10	CE-66-2	100 mfd Electrolytic
C11	CE-66-2	40 mfd. Electrolytic

Model TR321-A operates on 105-125 volts 60 cycles AC only.

Model TR331-A operates on 105-125 volts 50 cycles AC only.

Majestic Radio & Television Corporation

2600 West 50th Street Chicago, Illinois, U. S. A.

TUBE LAYOUT MODEL 403

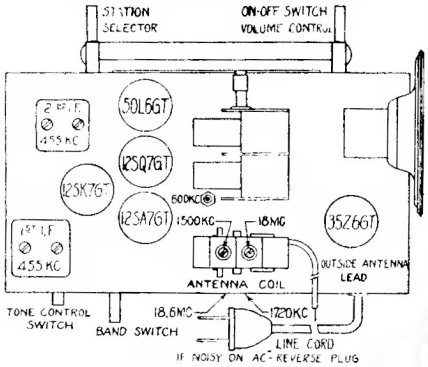

I.F. 455 KC.
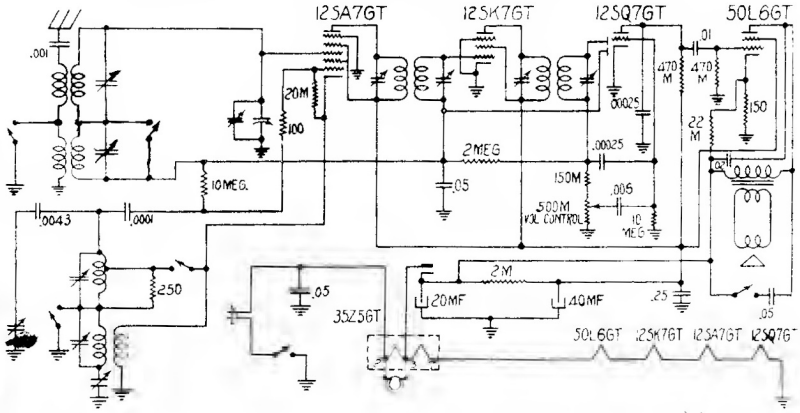
SCHEMATIC DIAGRAM MODEL 403