Mantola

Models R662 R662N

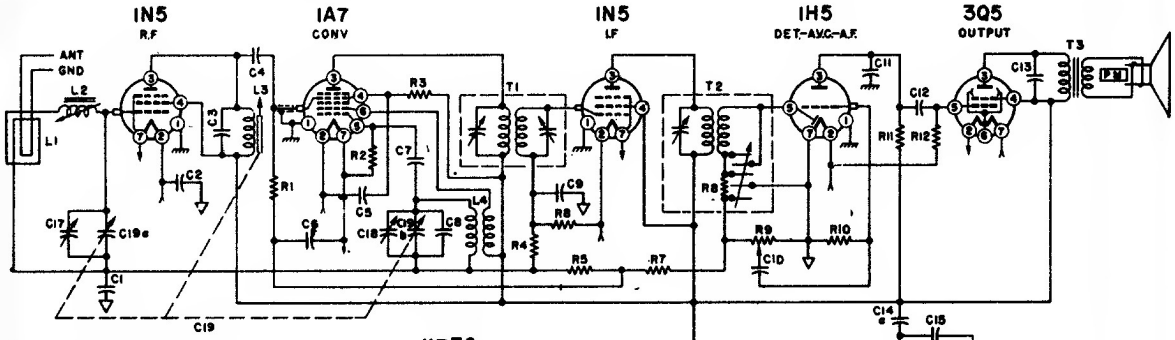

NOTES: I.F.=455 Kilocycles
Power change switch (SW1) shown in battery operation position.
In some models, loop loading coil (L2) was fixed.

CONDENSERS

Symbol	Description	Part No.
C1	.05 Mfd., 200 Volt, Paper	64B1-32
C2	.25 Mfd., 200 Volt, Paper	64B1-28
C3	.00042 Mfd., Mica	65B1-9
C4, C11	.00025 Mfd., Mica	65B5-22
C5, C6, C9, C10, C12	.01 Mfd., 400 Volt, Paper	64B1-25
C7	.00005 Mfd., Mica	65B5-11
C8	.000015 Mfd., Mica	65B5-3
C13	.002 Mfd., 600 Volt, Paper	64B1-14
C14a	50 Mfd., 150 Volt (Elect. Cond.)	67C7-42
C14b	30 Mfd., 150 Volt (Elect. Cond.)	67C7-42
C14c	100 Mfd., 25 Volt (Elect. Cond.)	67C7-42
C15	.2 Mfd., 400 Volt, Paper	64A2-1
C16	.05 Mfd., 400 Volt, Paper	64B1-22
C17	Antenna Trimmer	66A12-5
C18	Oscillator Trimmer (Part of Gang)	
C19 (C18a, C19b)	Condenser, Gang	68B4

RESISTORS

Symbol	Description	Part No.
R1	100,000 Ohms, ½ Watt, Carbon	60B8-104
R2	220,000 Ohms, ½ Watt, Carbon	60B8-224
R3	47,000 Ohms, ½ Watt, Carbon	60B8-473
R4, R5	4.7 Megohms, ½ Watt, Carbon	60B2-475
R6	4.7 Megohms, ½ Watt, Carbon	60B2-475
R7	3.3 Megohms, ½ Watt, Carbon	60B2-335
R8	50,000 Ohms, ½ Watt, Carbon	60B8-503
R9	1 Megohm Volume Control	75B1-100
R10	15 Megohms, ½ Watt, Carbon	60B2-156
R11	1 Megohm, ½ Watt, Carbon	60B2-105
R12	2.2 Megohms, ½ Watt, Carbon	60B2-225
R13	22 Ohms, Wire Wound, ½ Watt	61A2-2
R14	2,450 Ohms, Wire Wound, 5 Watt	61A3-5
R16	1,500 Ohms, ½ Watt, Carbon	80B8-152
R17	560 Ohms, ½ Watt, Carbon	60B8-561
R18	220 Ohms, ½ Watt, Carbon	80B8-221
R19	120 Ohms, ½ Watt, Carbon	60B8-121

COILS & TRANSFORMERS

Symbol	Description	Part No.
L2	Coil, Loop Loading, (fixed)	AA114
	Coil, Loop Loading, (variable)	AA115
L3	Iron Slug for plate coil	71B1-3
	Coil, Plate	70A1-30
L4	Oscillator Coil	69A7
L5	Choke Filter	74A5
T1	1st I.F. Transformer	72B9-2

COILS & TRANSFORMERS

Symbol	Description	Part No.
T2	2nd I.F. Transformer	72B10-2
T3	Transformer, Output	e
	eWhen ordering, specify all numbers on the speaker and transformer.	
SW1	Switch, Power Change (R662)	77A6
	Switch, Power Change (R662N)	77A10

MISCELLANEOUS

Description	Part No.
Dial Background	21A18-2
Dial Cord, 12"	50A1-3
Dial Cord Tension Spring	19A1-2
Escutcheon and Dial Scale	23C14
Knob, Tuning	33A14-6
Knob, Volume	33A14-5
Plug, Battery (9 prong)	88A3-3
Pointer, Cream Tenite	25A15-1
Speaker & Output Transformer	78B8
Tube Shields	87A8

VOLTAGE CHART

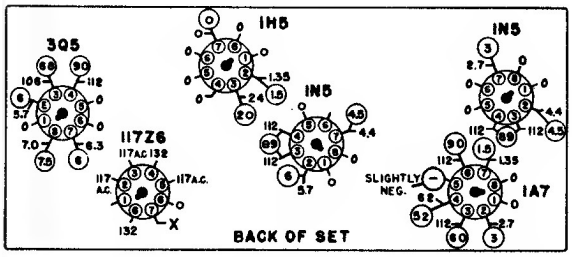

VOLTAGE DATA

1. Voltage readings circled (O) are for Battery Operation.
2. All readings made between Tube Socket Terminals and Terminal No. 7 on the 117Z6 (Point "X" on Voltage Chart).
3. A.C. Voltages measured on a 117 Volt A.C. line.
4. Battery Voltages measured with a fresh battery.
5. Dial turned to low frequency end, no signal.
6. All Voltages measured with a 1000 ohm-per-volt meter.

THE B. F. GOODRICH CO.