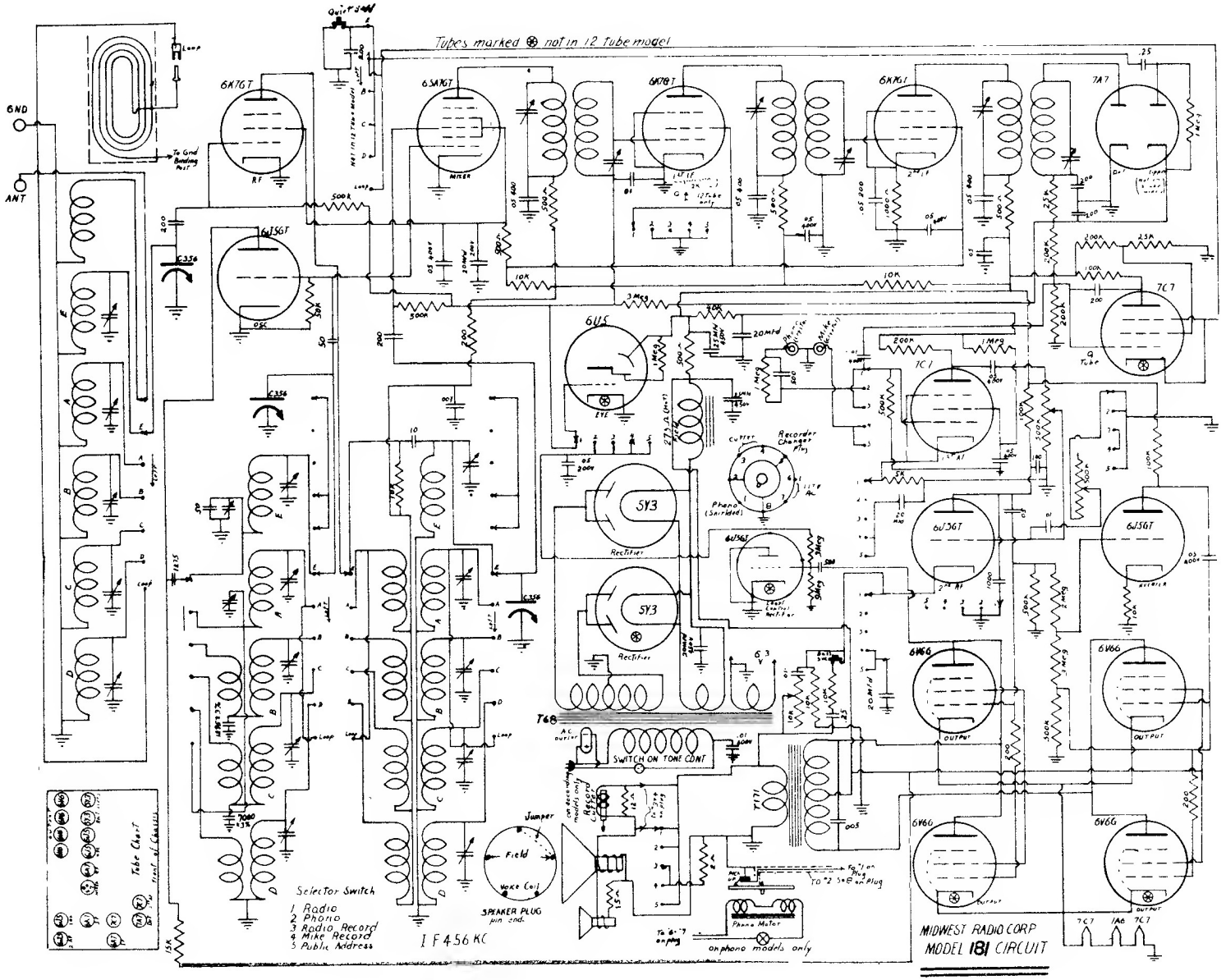
Tubes marked ⊛ not in 12 tube model
GND
ANT
6K7GT
6SA7GT
6K7GT
6K7GT
7A7
6J5GT
6U5
7C7
7C1
6J5GT
6J5GT
6V6G
6V6G
6V6G
6V6G
5Y3
5Y3
Rectifier
Rectifier
Recorder Changer Plug
Phono (Shielded)
SWITCH ON TONE CONT
T68
T171
Jumper
Field
Voice Coil
SPEAKER PLUG
pin end
Phono Motor
on phono models only
Selector Switch
1 Radio
2 Phono
3 Radio Record
4 Mike Record
5 Public Address
I F 456 KC
Tube Chart
front of Chassis
MIDWEST RADIO CORP
MODEL 181 CIRCUIT