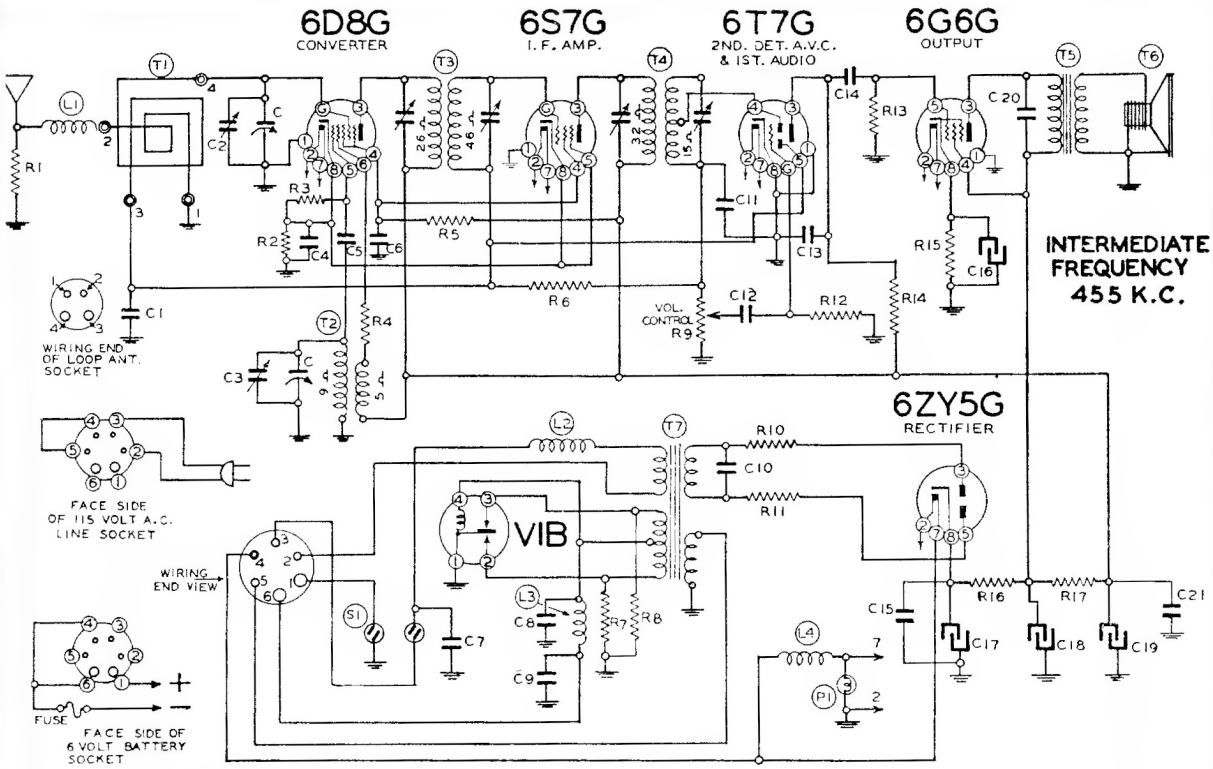

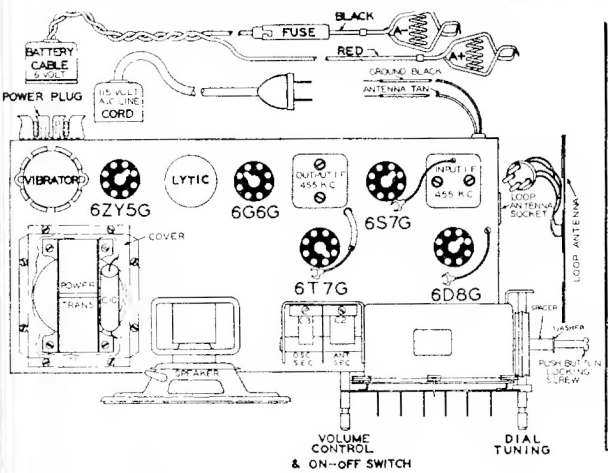

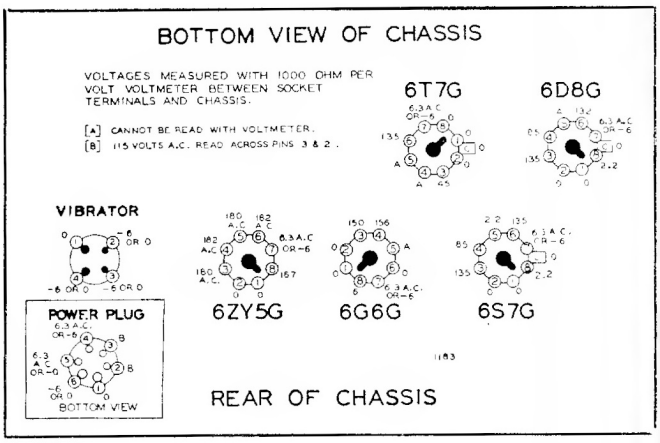

MONTGOMERY WARD

MODEL 04BR-570A

RESISTORS

R1	BE13022	5M ohm—⅓ watt
R2	BE130166	150 ohm—⅓ watt
R3	BE13012	50M ohm—⅓ watt
R4	BE13026	1000 ohm—⅓ watt
R5	BE130157	12M ohm—⅓ watt
R6	BE1304	3 megohm—⅓ watt
R7	BE130168	100 ohm—⅓ watt
R8	BE130168	100 ohm—⅓ watt
R9	BE101225	1 megohm volume control
R10	BE130233	60 ohm—⅓ watt
R11	BE130233	60 ohm—⅓ watt
R12	BE130223	10 megohm—⅓ watt
R13	BE13037	750M ohm—⅓ watt
R14	BE13011	250M ohm—⅓ watt
R15	BE13079	400 ohm—⅓ watt
R16	BE130222	350 ohm—⅓ watt
R17	BE130235	1500 ohm—⅓ watt

PARTS

T1	BE111187	Loop Antenna Assembly
T2	BE110155	Oscillator Coil
T3	BE108129C	Input I.F. Coil—455 kc.
T4	BE108130D	Output I.F. Coil—455 kc.
T5	BE105113	Output Transformer
T6	BE114205	5" P.M. Speaker
T7	BE104216	Power Transformer
L1	BE12312	R.F. Choke
L2	BE10566	R.F. "A" Choke
L3	BE10568	R.F. Choke
L4	BE10566	R.F. "A" Choke
		On-Off Switch on Volume Control
P1	BE12626	Plug-in Vibrator Unit

CONDENSERS

C	BE102134	2 gang variable condenser
C1	BE1009	.05 x 200 volts
C2		Antenna trimmer on gang
C3		Oscillator trimmer on gang
C4	BE10020	.1 x 200 v.
C5	BE1295	.0001 mica
C6	BE10020	.1 x 200 v.
C7	BE10013	.05 x 400 v.
C8	BE10031	.5 x 120 v.
C9	BE10031	.5 x 120 v.
C10	BE10073	.008 x 1200 v.
C11	BE12951	.000125 mica
C12	BE10012	.003 x 600 v.
C13	BE12960	.00015 mica
C14	BE10011	.01 x 400 v.
C15	BE10020	.1 x 200 v.
C16	BE119111	20 mfd. lytic—25 w. v.
C17	BE119111	40 mfd. lytic—200 w. v.
C18	BE119111	20 mfd. lytic—200 w. v.
C19	BE119111	20 mfd. lytic—200 w. v.
C20	BE10019	.006 x 600 v.
C21	BE10020	.1 x 200 v.

C16, C17, C18, C19 are in same unit