MONTGOMERY WARD Model 15GSE-1595A. Models 25GSE-1555A and 25GSE-1556A use the same circuit, but differ in chassis layout and cabinet.

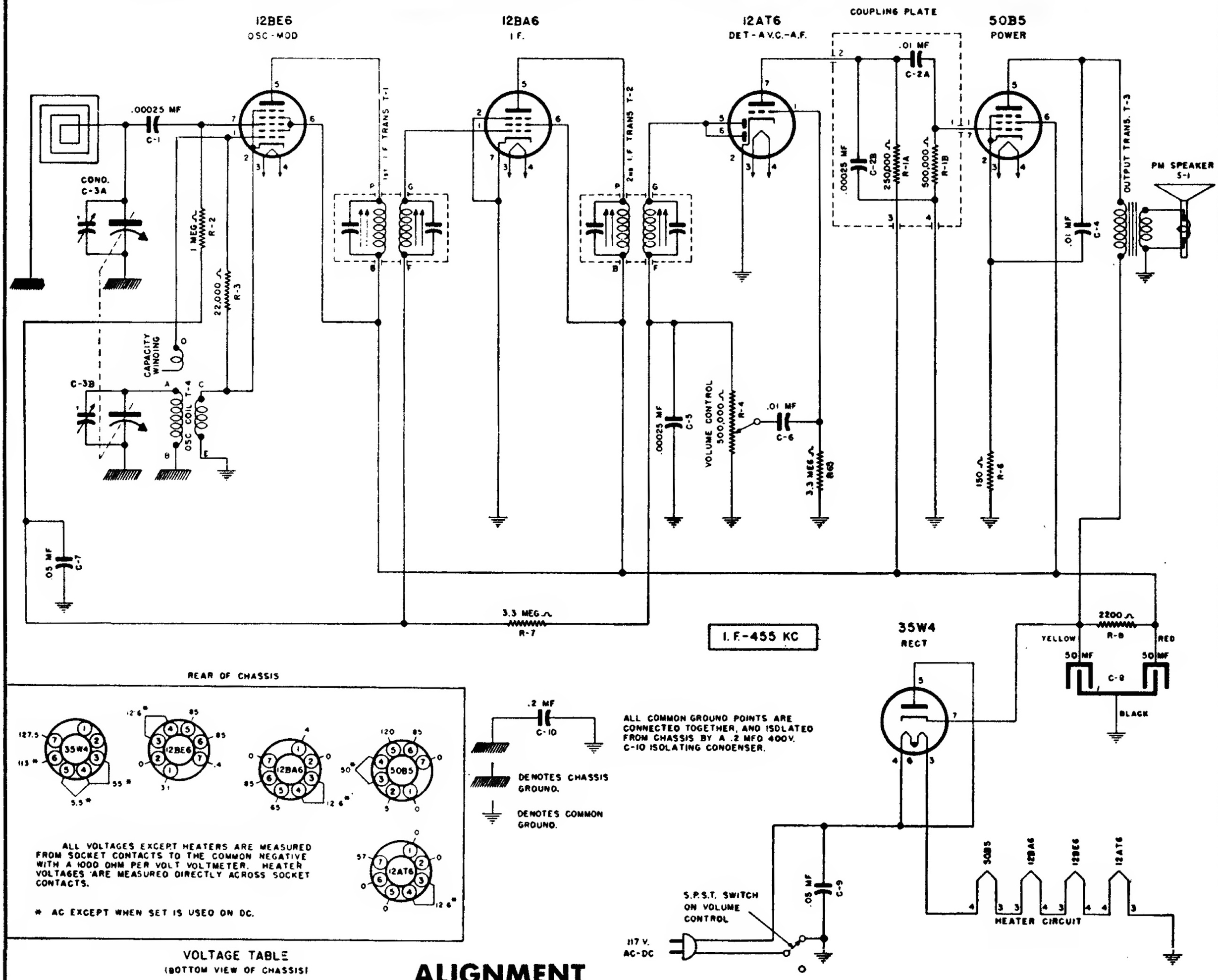

ALIGNMENT

WHEN ADJUSTING THE 1650 KC OSCILLATOR TRIMMER, remove chassis from cabinet and disconnect the loop connection wires from the loop. Attach a 1 megohm resistor across these connections and feed output of test oscillator across the 1 megohm resistor.
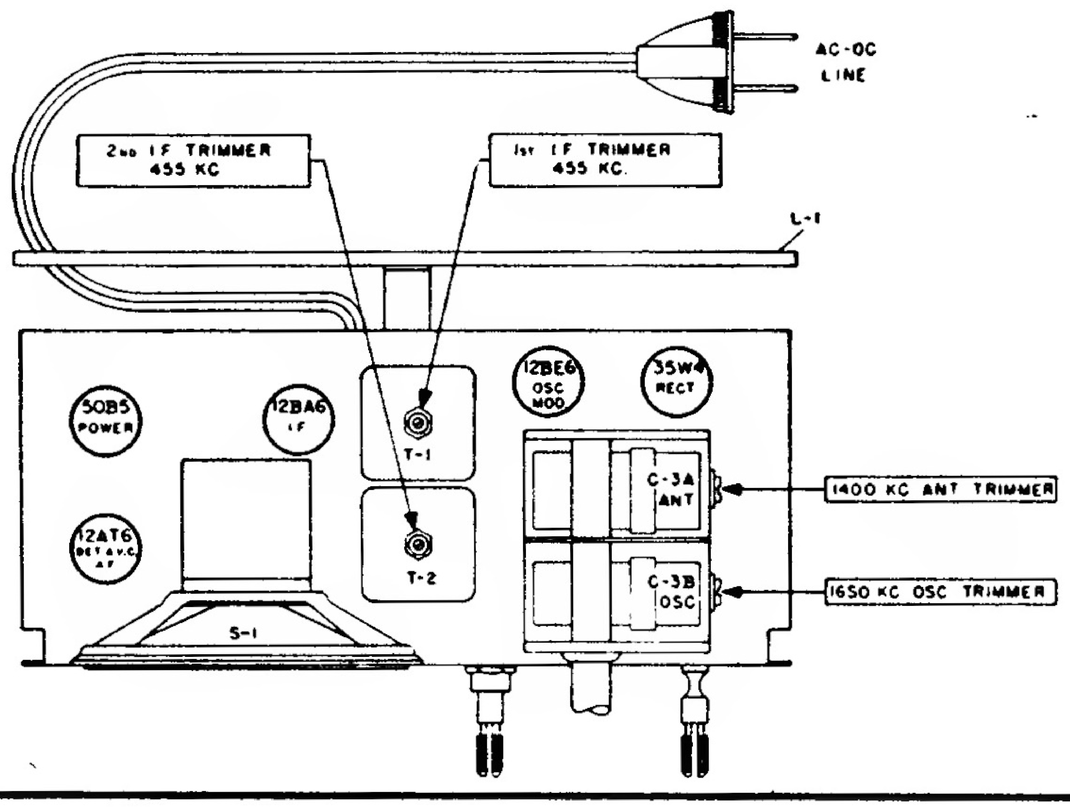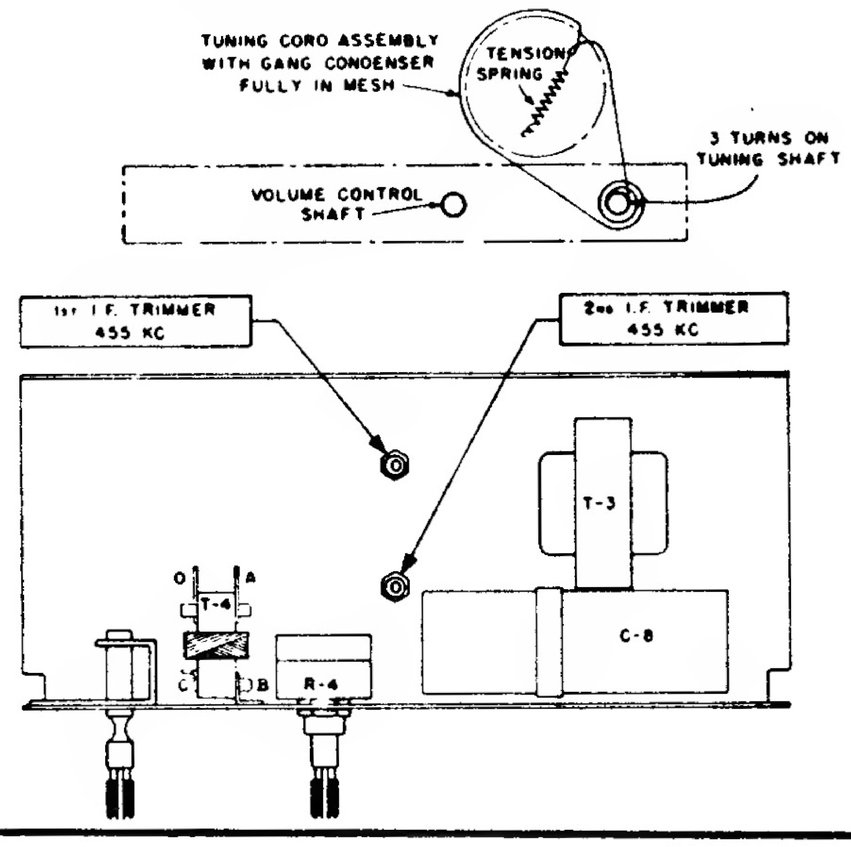
THE 1400 KC LOOP ANTENNA TRIMMER should be adjusted only after all other adjustments have been made. PLACE LOOP ANTENNA IN THE SAME POSITION IT WILL BE IN WHEN THE SET IS IN THE CABINET—APPROXIMATELY 5/8" SPACE BETWEEN LOOP AND CHASSIS.