MONTGOMERY WARD

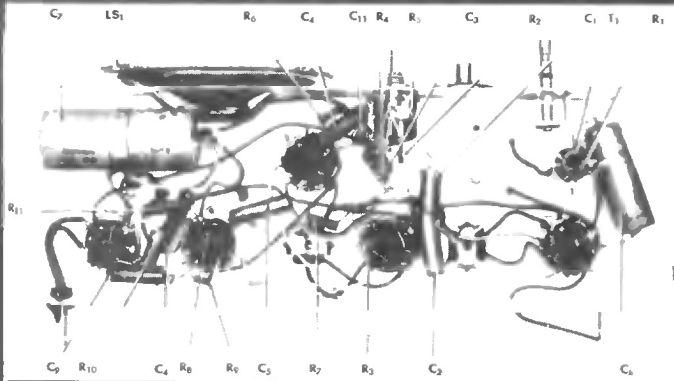

DIAL CORD STRINGING

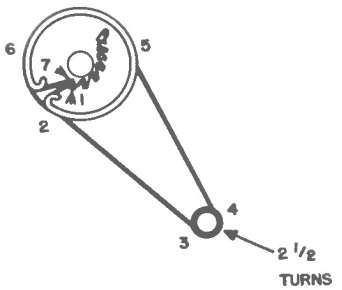

RADIO TABLE MODELS 15HA-1553A 15HA-1554A

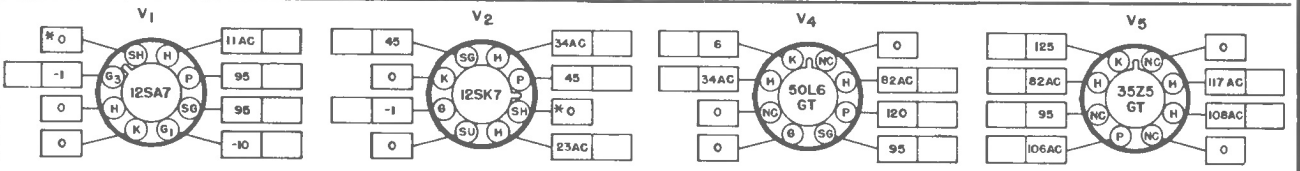

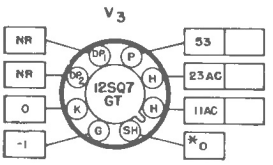

*CAUTION—SEE NOTE 9.

Intermediate Frequency. . . . . .455 KC

1. SOCKET VIEWS ARE BOTTOM VIEWS.
2. ALL VOLTAGES ARE MEASURED BETWEEN TUBE SOCKET TERMINALS AND ELECTRICAL GROUND (NOT CHASSIS) WITH ZERO SIGNAL INPUT.
3. LINE VOLTAGE ____117 V AC.
4. ALL VOLTAGES SHOWN ARE DC UNLESS OTHERWISE SPECIFIED. AC VOLTAGES SHOWN BECOME DC WHEN OPERATING FROM A DC LINE.
5. DC VOLTAGES SHOWN WERE MEASURED WITH AN ELECTRONIC VOLTMETER.
6. "NC"____NO CONNECTION (VOLTAGE SHOWN FOR THIS TERMINAL ONLY WHEN TERMINAL IS USED AS A TIE LUG)
7. "NR"____NOT READABLE. (READING GENERALLY MEANINGLESS)
8. [ ] SPACE PROVIDED FOR SERVICE METER READINGS
9. ALL READINGS TAKEN WITH LINE PLUG POLARIZED SO THAT GROUND BUSS AND CHASSIS ARE AT THE SAME POTENTIAL WITH THE CHASSIS GROUNDED.

FRONT APRON

BOTTOM VIEW OF CHASSIS

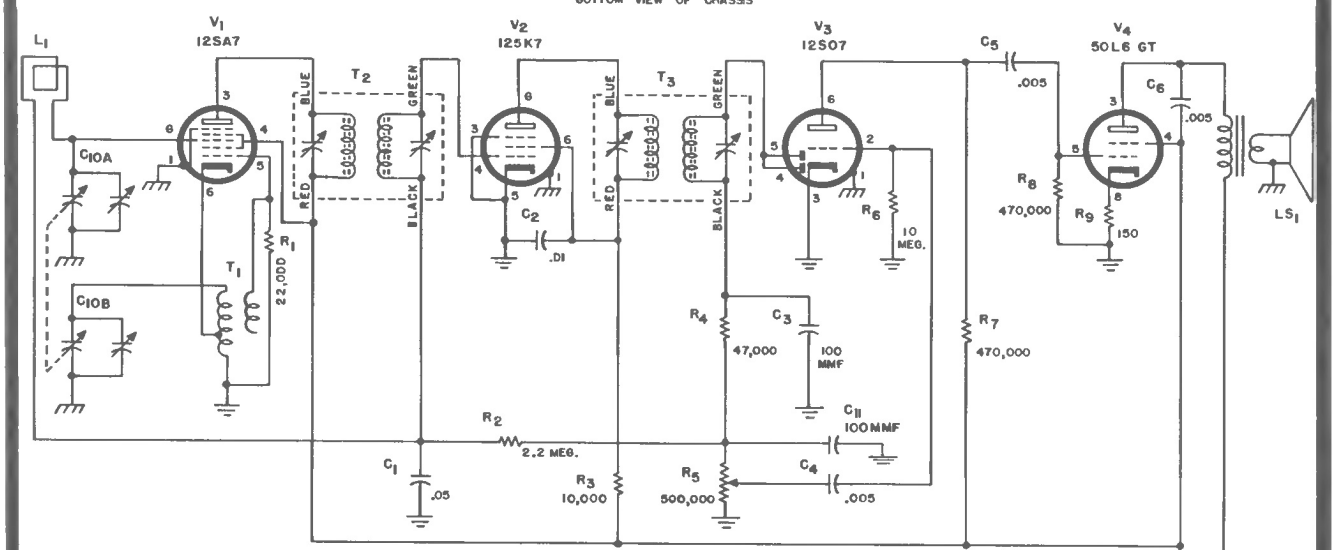

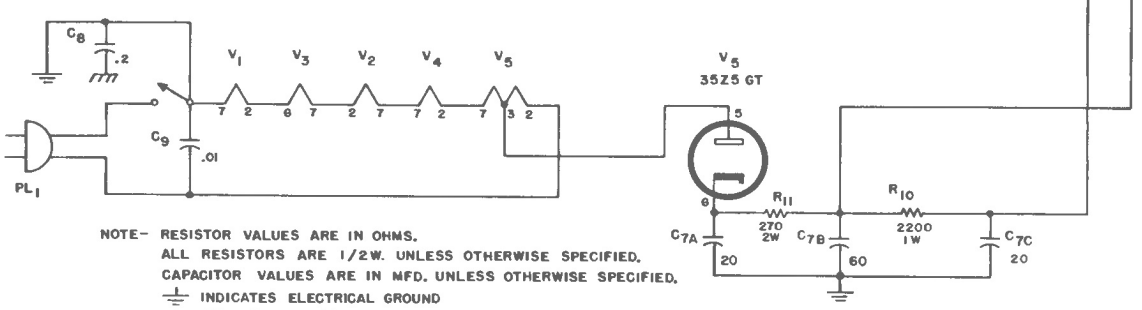

NOTE- RESISTOR VALUES ARE IN OHMS.
ALL RESISTORS ARE 1/2W. UNLESS OTHERWISE SPECIFIED.
CAPACITOR VALUES ARE IN MFD. UNLESS OTHERWISE SPECIFIED.
⏚ INDICATES ELECTRICAL GROUND
⏚ INDICATES CHASSIS GROUND