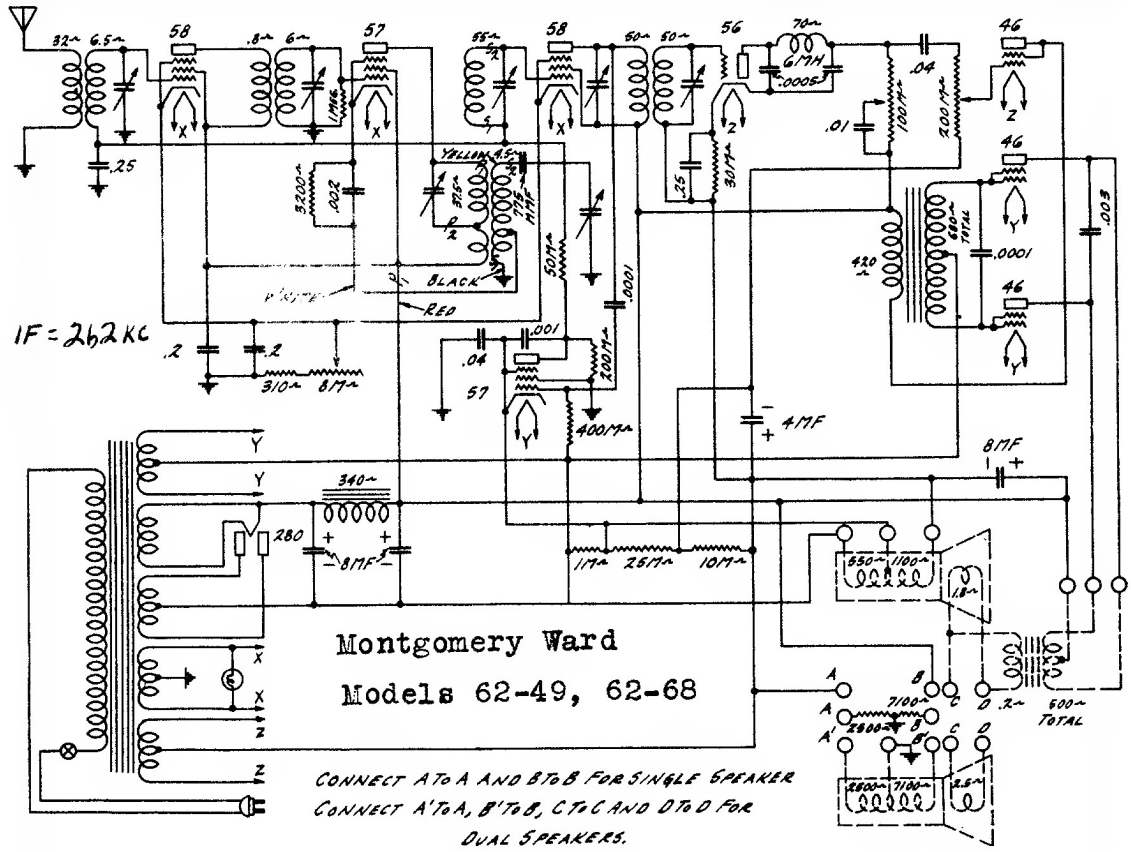
IF = 262 KC
Montgomery Ward
Models 62-49, 62-68
CONNECT A TO A AND B TO B FOR SINGLE SPEAKER
CONNECT A' TO A, B' TO B, C TO C AND D TO D FOR
DUAL SPEAKERS.

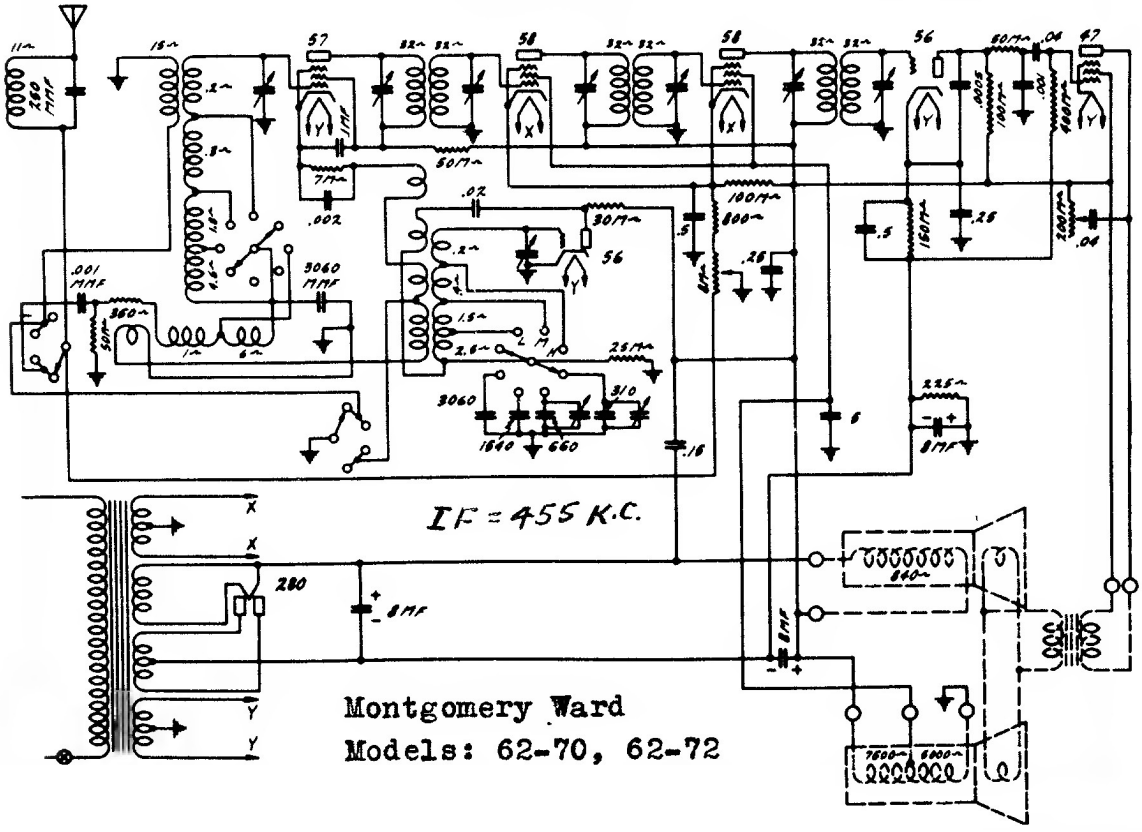
IF = 455 K.C.
Montgomery Ward
Models: 62-70, 62-72