Montgomery Ward Models 93BR713A and 62-713-A.

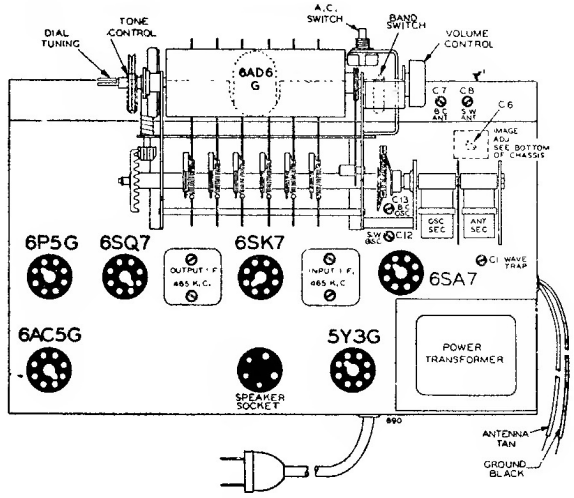

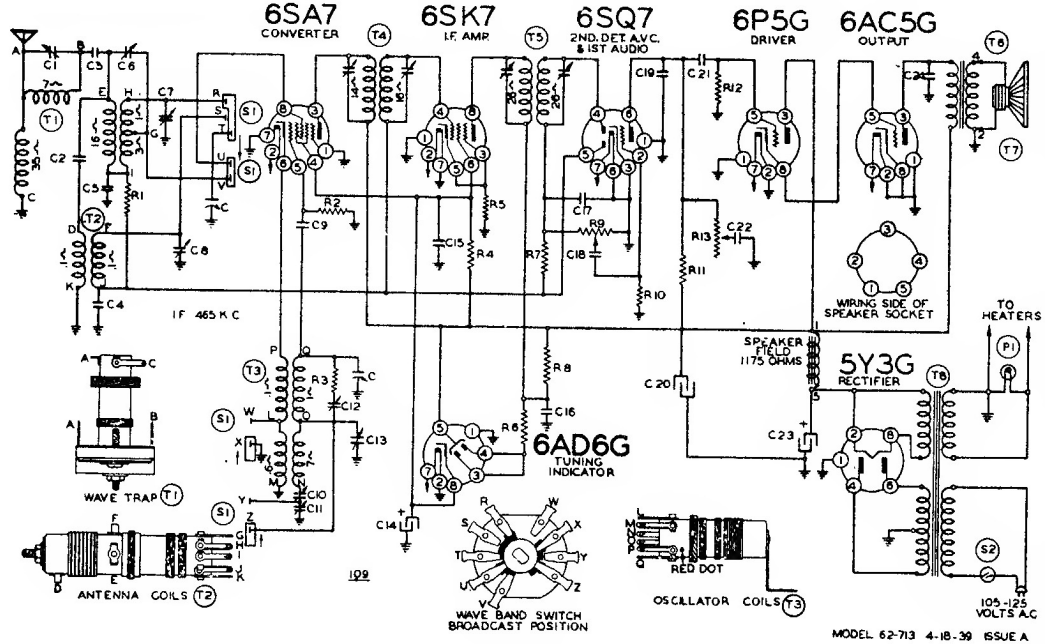

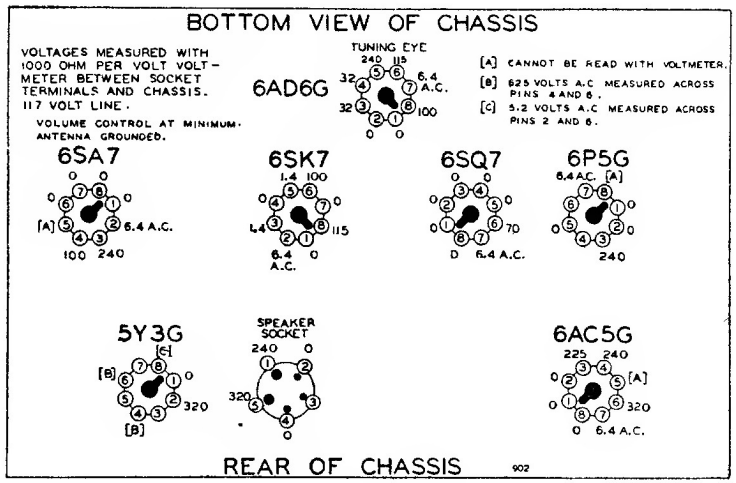

Schematic Ref. No.	Part No.	Description
		RESISTORS
R1	BE13011	250M ohm—20%—⅓ w.
R2	BE13021	20M ohm—20%—⅓ w.
R3	BE130197	20 ohm—10%—⅓ w.
R4	BE130144	15M ohm—20%—1 watt
R5	BE130168	100 ohm—10%—⅓ w.
R6	BE130110	1 megohm—10%—1/10 w.
R7	BE1304	3 megohm—20%—⅓ w.
R8	BE13055	12M ohm—20%—2 watt
R9	BE101166	1 megohm—volume control
R10	BE130225	15 megohm—50—30%—⅓ w.
R11	BE1303	500M ohm—20%—⅓ w.
R12	BE13019	1 megohm—20%—⅓ w.
R13	BE101167	1 megohm—tone control
		CONDENSERS
C	BE102106B	2 gang variable condenser
C1	BE12467	Wave Trap Trimmer
C2	BE129140	.00016 mica—5%
C3	BE10011	.01 x 400 volt—25%
C4	BE1009	.05 x 200 volt—25%
C5	BE129131	.002775 mica—3%
C6	BE12468	Image Trimmer
C7	BE12475	B. C. Antenna Trimmer
C8	BE12475	S. W. Antenna Trimmer
C9	BE12960	.00015 Mica—20%
C10	BE12487	B. C. Series Pad
C11	BE12487	S. W. Series Pad
C12	BE12476	S. W. Oscillator Trimmer
C13	BE12476	B. C. Oscillator Trimmer
C14	BE11984	5. mfd. x 300 v. lytic
C15	BE1001	.1 x 400 v. 50—10%
C16	BE1001	.1 x 400 v. 50—10%
C17	BE1295	.0001 mica—20%
C18	BE10071	.004 x 600 v.—25%
C19	BE1292	.0005 mica—20%
C20	BE11984	15 mfd. x 350 v. lytic
C21	BE10026	.02 x 400 v.—25%
C22	BE10071	.004 x 600 v.—25%
C23	BE11984	10 mfd. x 450 v. lytic
C24	BE10019	.006 x 600 v.—25%

C7 and C8 in one unit. C10 and C11 in one unit. C12 and C13 in one unit. C14, C20, and C23 in one unit.

		PARTS
T1	BE108146	Wave Trap
T2	BE111122	Antenna Coil Complete
T3	BE110115	Oscillator Coil Complete
T4	BE108111H	Input I. F. Coil—465 kc.
T5	BE108132B	Output I. F. Coil—465 kc.
T6	BE10590	Output Transformer
T7	BE114161	6" Dynamic Speaker (1175 Ohm Field)
T8	BE104139D	Power Transformer
P1	BE10794	6-8 volt pilot light T44
S1	BE12576	Band Switch
S2	BE12577	AC Switch