WARDS

MODEL 64BR-1051A

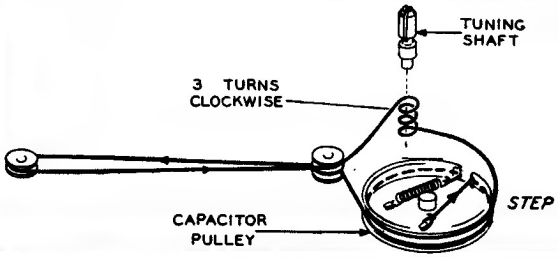

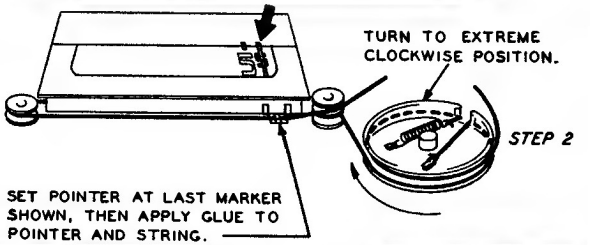

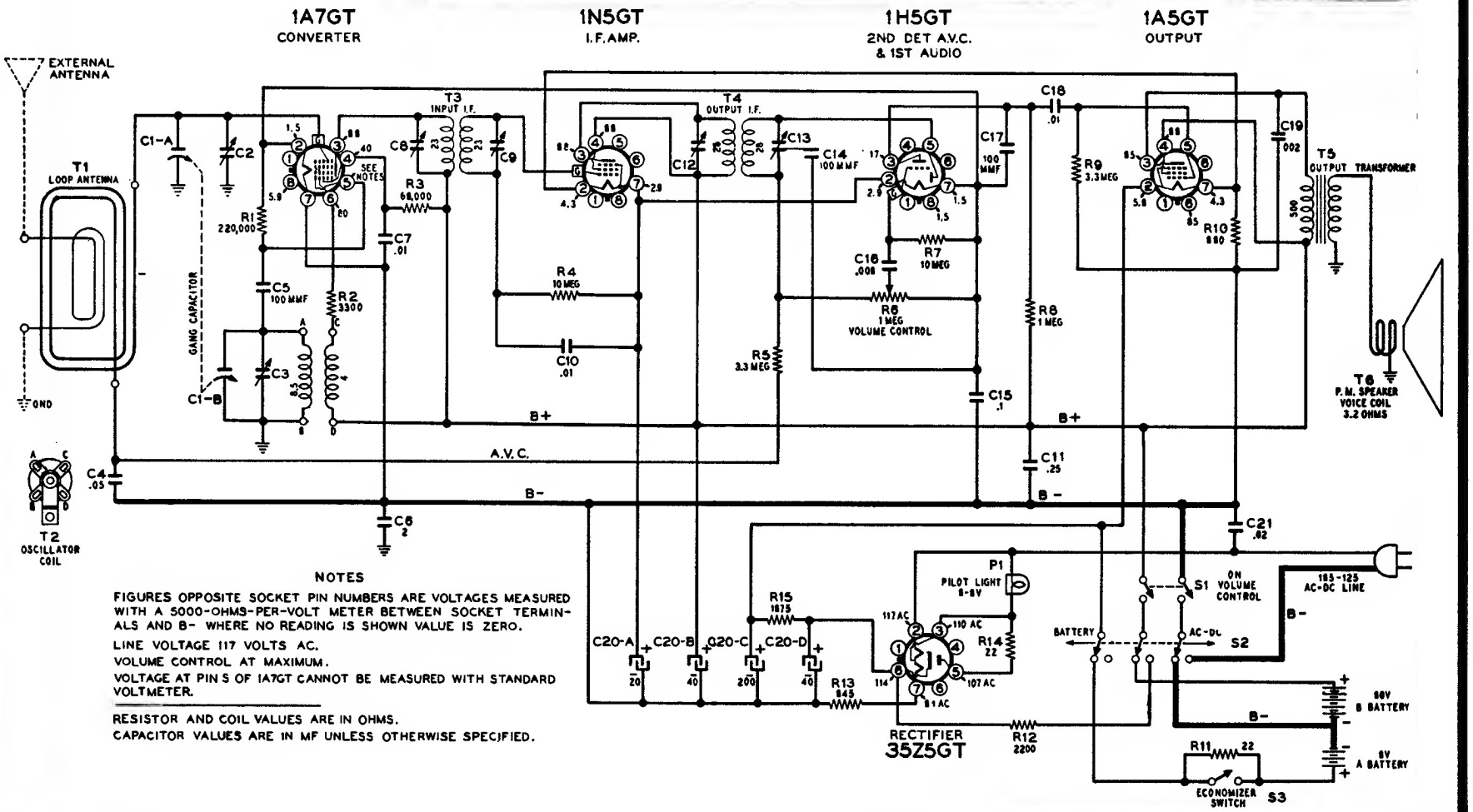

NOTES

FIGURES OPPOSITE SOCKET PIN NUMBERS ARE VOLTAGES MEASURED WITH A 5000-OHMS-PER-VOLT METER BETWEEN SOCKET TERMINALS AND B- WHERE NO READING IS SHOWN VALUE IS ZERO.

LINE VOLTAGE 117 VOLTS AC.

VOLUME CONTROL AT MAXIMUM.

VOLTAGE AT PIN S OF 1A7GT CANNOT BE MEASURED WITH STANDARD VOLTMETER.

RESISTOR AND COIL VALUES ARE IN OHMS.

CAPACITOR VALUES ARE IN MF UNLESS OTHERWISE SPECIFIED.