WARDS *Airline* AMPLIFIER

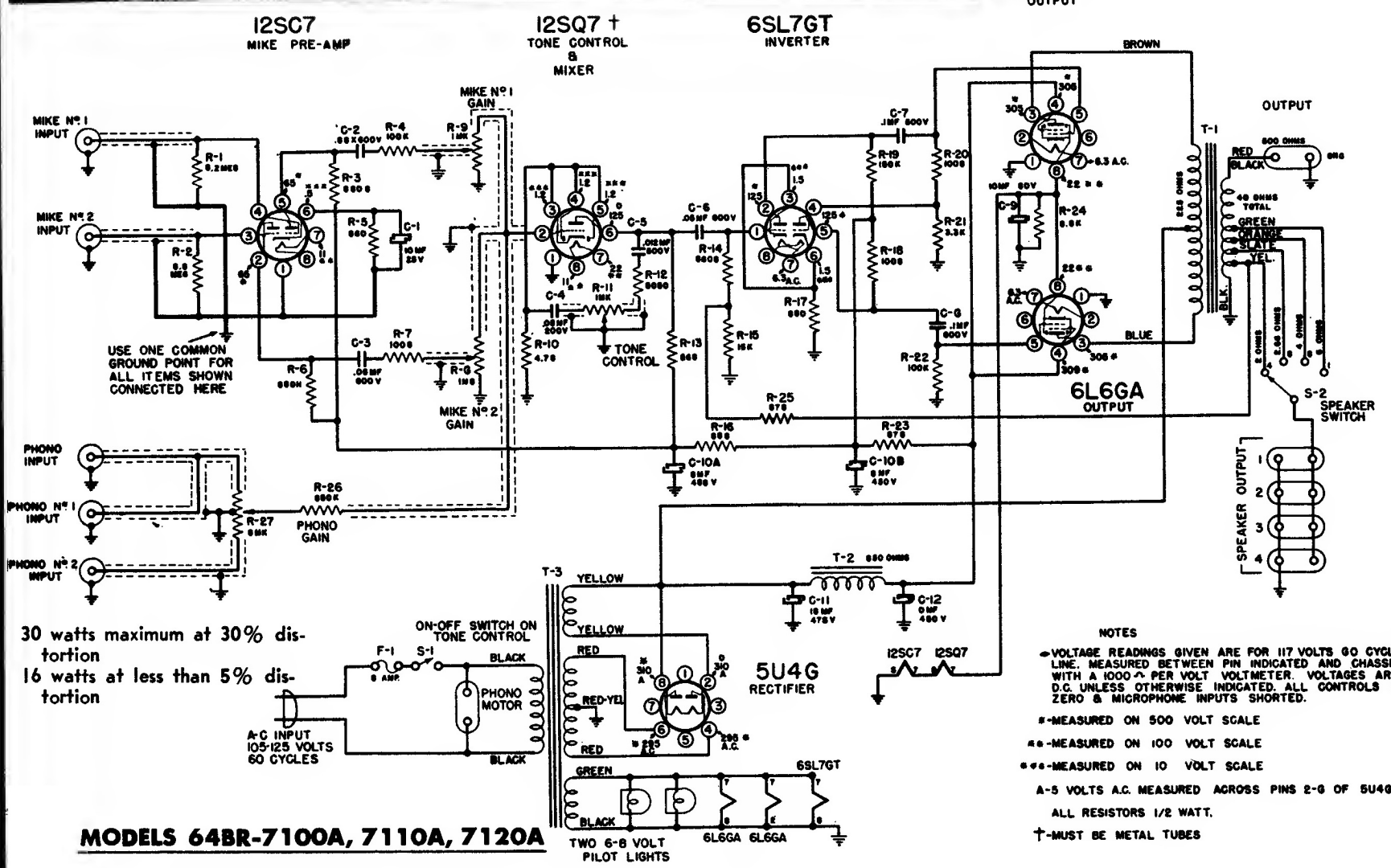

30 watts maximum at 30% distortion
16 watts at less than 5% distortion

MODELS 64BR-7100A, 7110A, 7120A

NOTES

- VOLTAGE READINGS GIVEN ARE FOR 117 VOLTS 60 CYCLES LINE. MEASURED BETWEEN PIN INDICATED AND CHASSIS WITH A 1000 Ω PER VOLT VOLTMETER. VOLTAGES ARE D.C. UNLESS OTHERWISE INDICATED. ALL CONTROLS AT ZERO & MICROPHONE INPUTS SHORTED.

* -MEASURED ON 500 VOLT SCALE

** -MEASURED ON 100 VOLT SCALE

*** -MEASURED ON 10 VOLT SCALE

A-5 VOLTS A.C. MEASURED ACROSS PINS 2-6 OF 5U4G

ALL RESISTORS 1/2 WATT.

† -MUST BE METAL TUBES