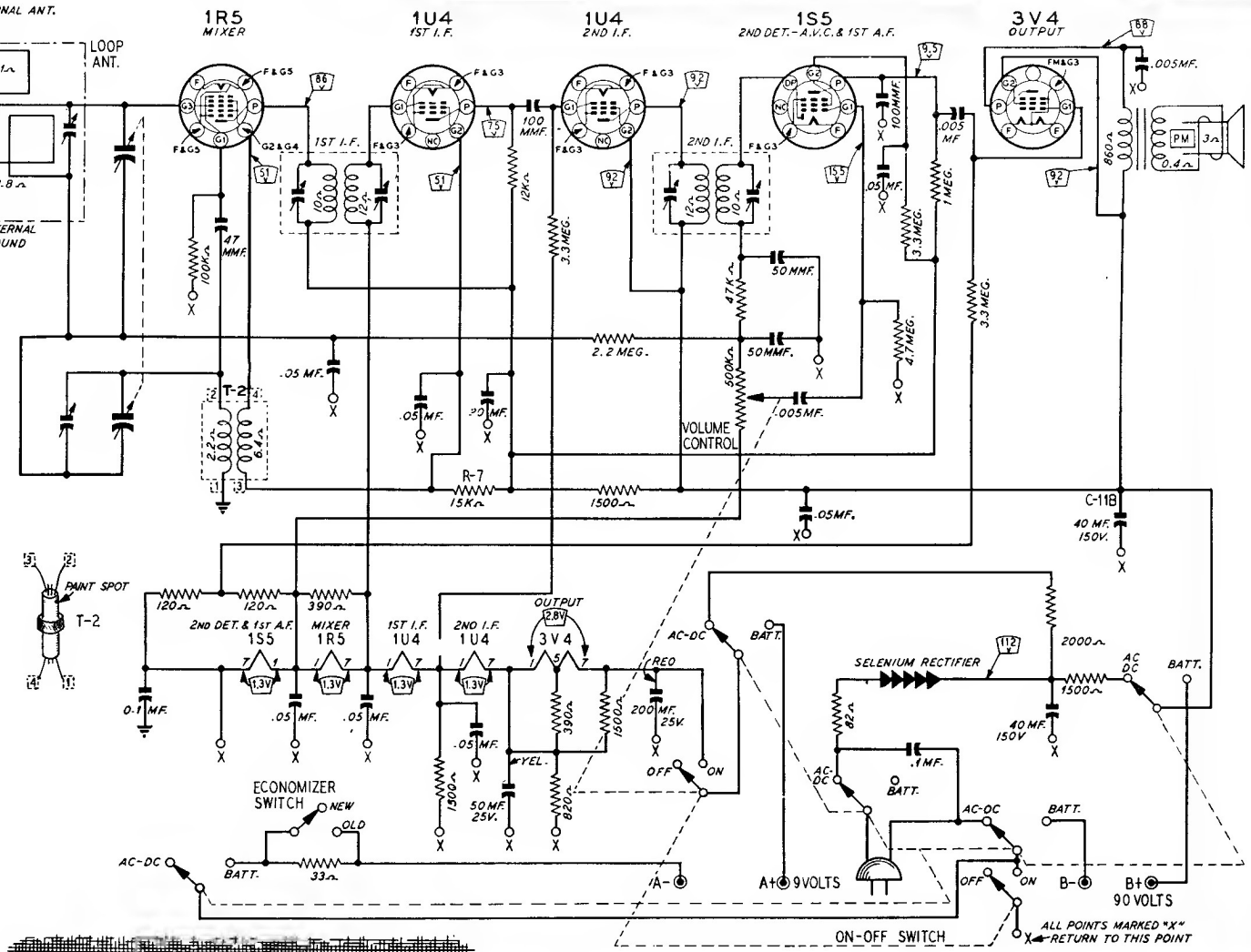

TUBE SOCKET VOLTAGES

The readings were taken with a 1000 ohm-per-volt meter and all plate and screen voltages read on a 500 volt scale. Conditions of measurement are:

Line voltage.....117 volts AC
Volume control.....maximum
Signal input.....none

A variation of ±10% is usually permissible.

Frequency Range.....540-1600 KC
Intermediate Frequency 455 KC

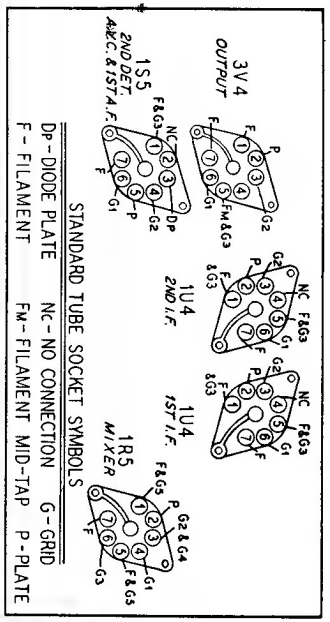

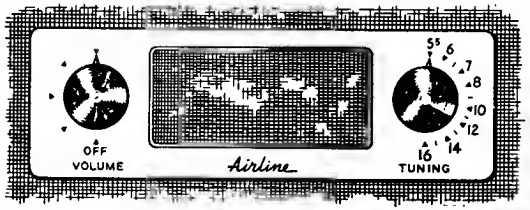

MODEL 74 WG-1054A

WARDS Airline