Motorola

MODELS 5M1 5M1U 5M2 5M2U

CHASSIS HS-223 HS-249

The following models are very similar: 5L1, 5L1U 5J1, 5J1U Chassis HS-224, HS-250.

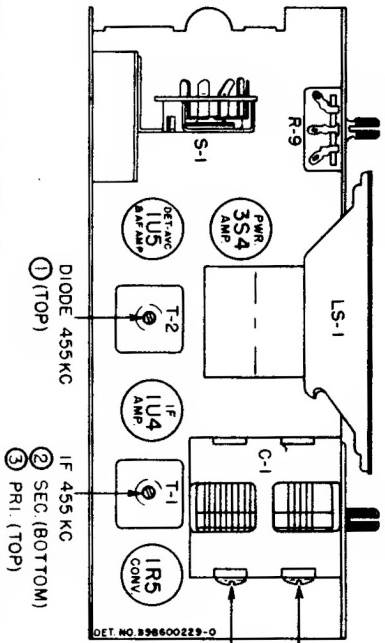

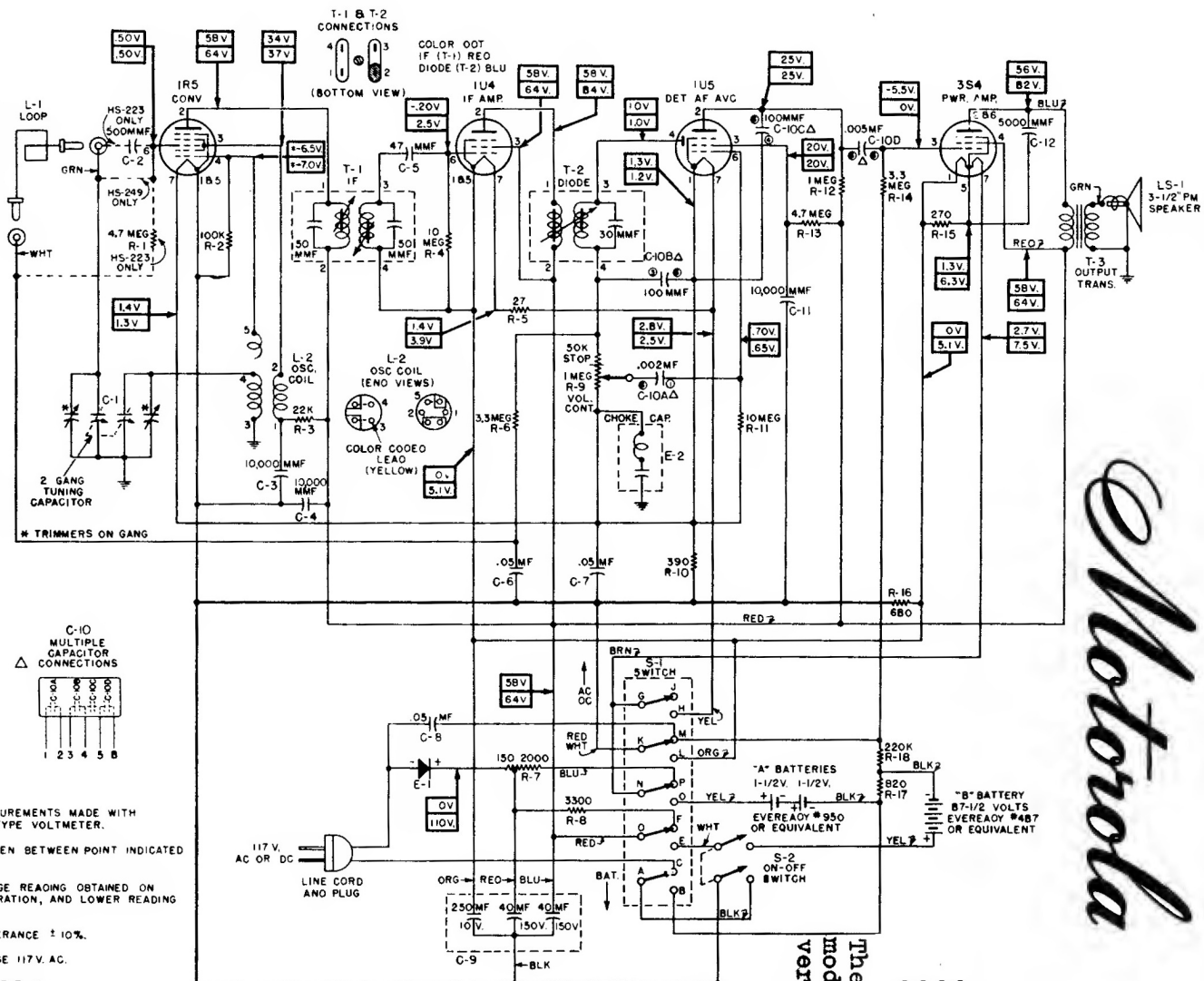

IF = 455 KC

FREQ. RANGE 535-1620 KC.

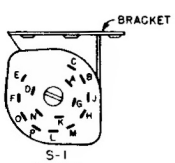

NOTES:-

1. VOLTAGE MEASUREMENTS MADE WITH ELECTRONIC TYPE VOLTMETER.
2. VOLTAGES TAKEN BETWEEN POINT INDICATED AND B-.
3. UPPER VOLTAGE READING OBTAINED ON BATTERY OPERATION, AND LOWER READING ON AC.
4. VOLTAGE TOLERANCE ± 10%.
5. INPUT VOLTAGE 117 V. AC.
6. NO SIGNAL INPUT.
7. * MEASUREMENT MADE WITH GANG FULLY OPEN.

NOTE:
RESISTOR VALUES ARE INDICATED IN OHMS.
K = ONE THOUSAND (1000) OHMS.
"A" BATTERY DRAIN = 150 MA AT 2.8 VOLTS.
"B" BATTERY DRAIN = 8.5 MA AT 67.5 VOLTS.

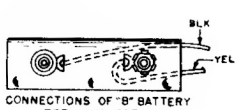

CONNECTIONS OF "B" BATTERY TERMINAL STRIP