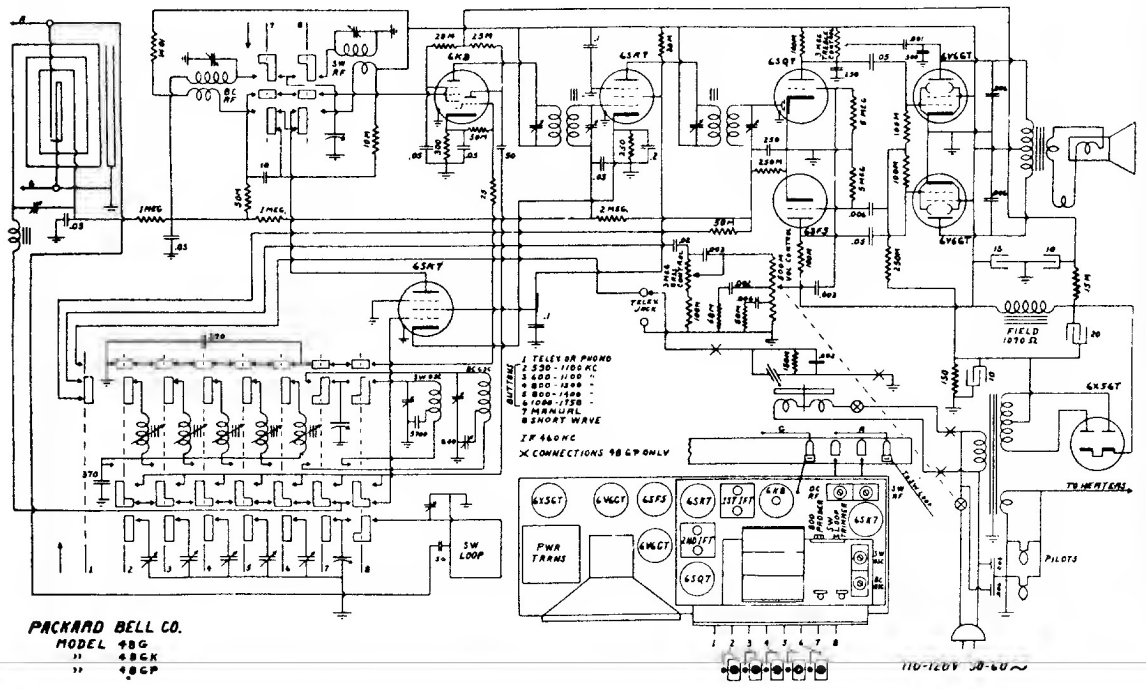

PACKARD BELL CO.
MODEL 48G
" 48GK
" 48GP

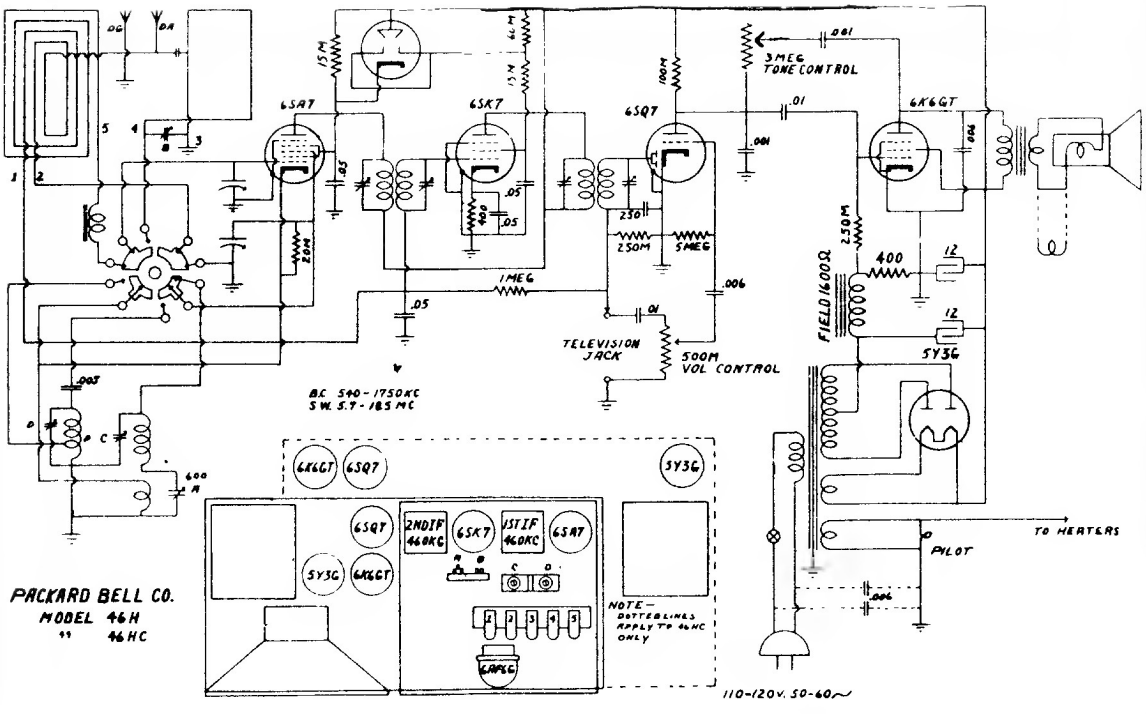

PACKARD BELL CO.
MODEL 46H
" 46HC