Packard-Bell

MODEL 651

ALIGNMENT CHART

STEP	CONNECT TEST OSC. TO	TEST OSC. SETTING	POINTER SETTING	ADJUST FOR MAXIMUM OUTPUT
1	Mixer grid & Grd. .01 Mfd. Dummy Load	455 KC	550 KC	Trimmers No. F, G, H & I
2	Mixer grid & Grd. .01 Mfd. Dummy Load	455 KC	550 KC	Trimmer No. A Minimum Output
3	Standard Test Loop*	1750 KC	1750 KC	Trimmer No. C to 1750 KC
4	Standard Test Loop*	600 KC	600 KC	Trimmer No. D to 600 KC
5	Standard Test Loop*	Repeat Steps 3 and 4		
6	S.W. Antenna thru 400 ohms	16.2 MC	16.2 MC	Trimmer No. B to 16.2 MC
7	S.W. Antenna thru 400 ohms	15.0 MC	15.0 MC	Trimmer No. K

*REMARKS: Haxeltine Test Loop No. 1150.

D.C. RESISTANCE MEASUREMENTS

1st I.F. Coil
- primary . . . 14.5 ohms
- secondary . . . 14.5 ohms

2nd I.F. Coil
- primary . . . 14.5 ohms
- secondary . . . 15 ohms

Oscillator Coil: (Short Wave and Standard Broadcast wound on same form.)

Short Wave:
- Start to finish . . . 2 ohms
- Start to tap . . . 1 ohm

Broadcast:
- Primary . . . 2 ohms
- Secondary . . . 9 ohms

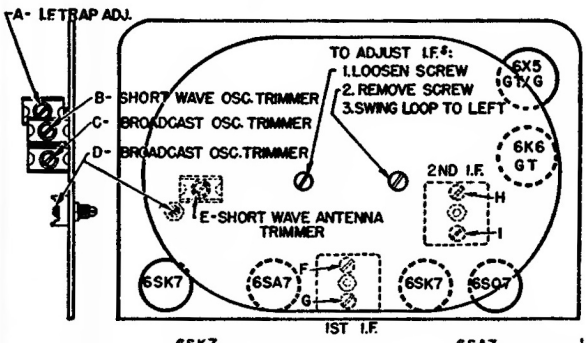

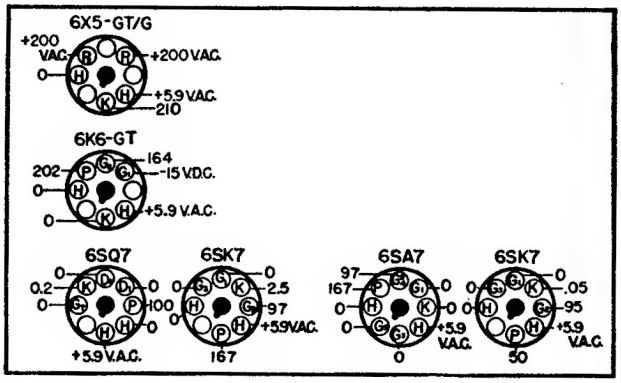
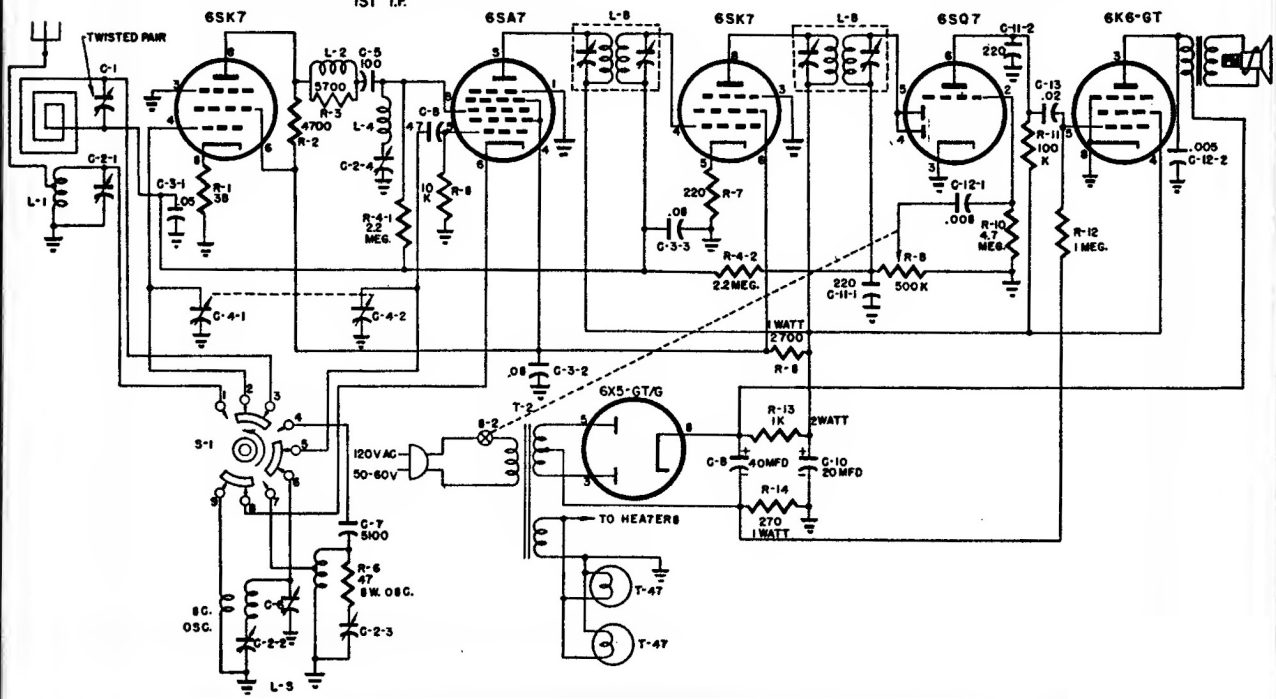
VOLTAGE CHART