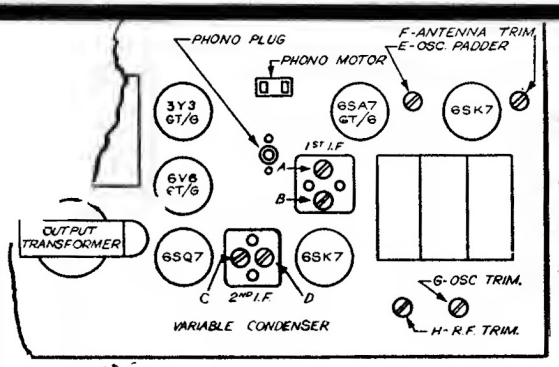

STEP	CONNECT TEST OSC.	TEST OSC. SETTING	POINTER SETTING	ADJUST FOR MAX. OUTPUT
1	Mixer Grid & Grd. (.01 Mfd. Cap.)	455KC	540 KC	Trimmers A, B, C & D
2	Standard Test Loop*	1620 KC	1620 KC	Trimmer G to 1620 KC
3	Standard Test Loop*	600 KC	Rock Variable	Padder E
4	Standard Test Loop*	1500 KC	1500 KC	Trimmers F & H
5	Repeat Steps 2, 3, & 4			

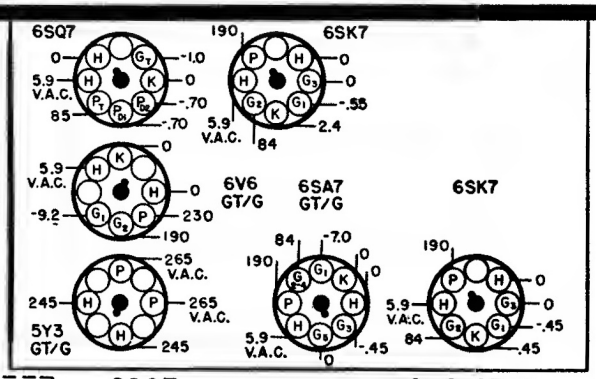

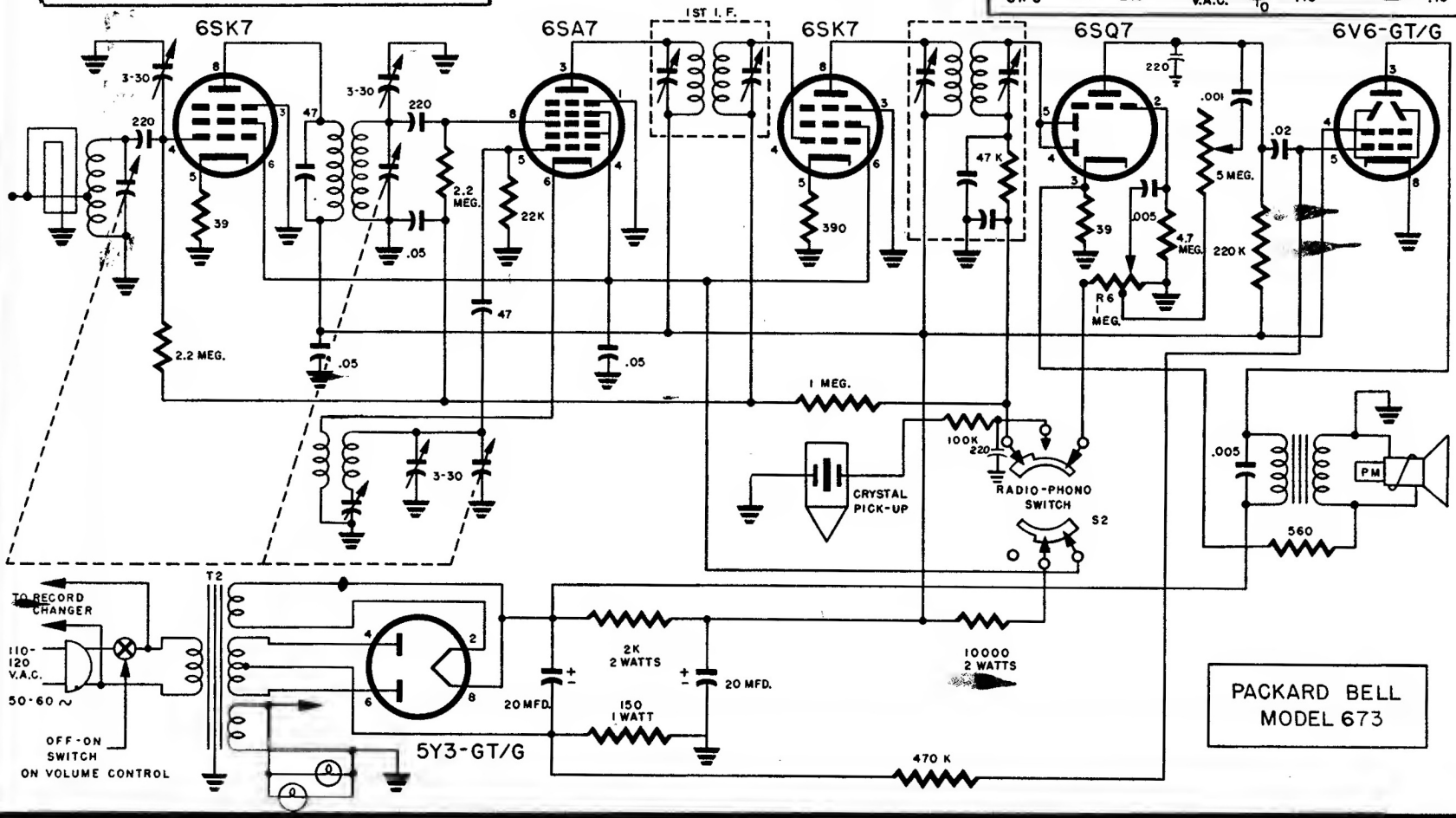

PACKARD BELL
MODEL 673