PHILCO

Model 40-165

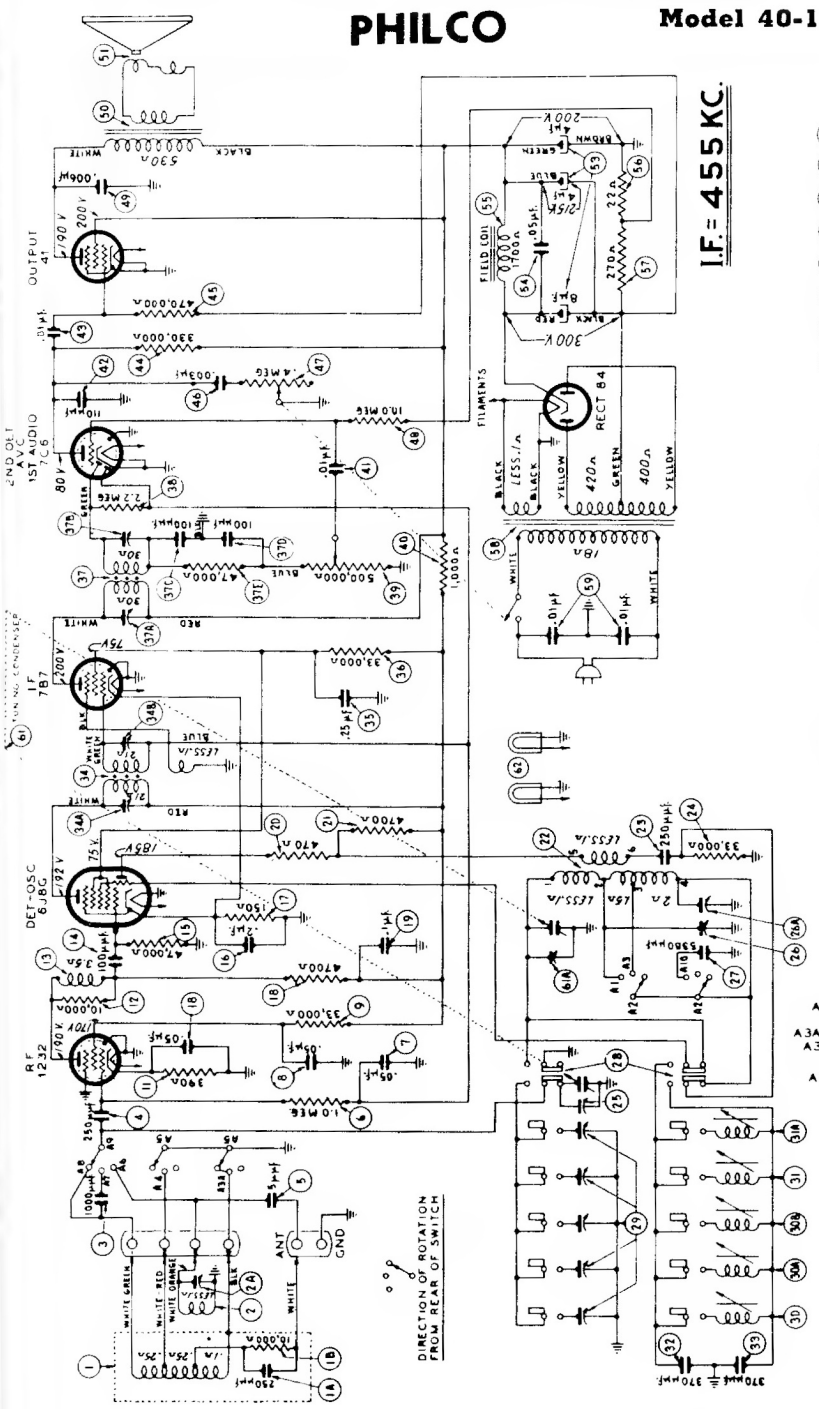

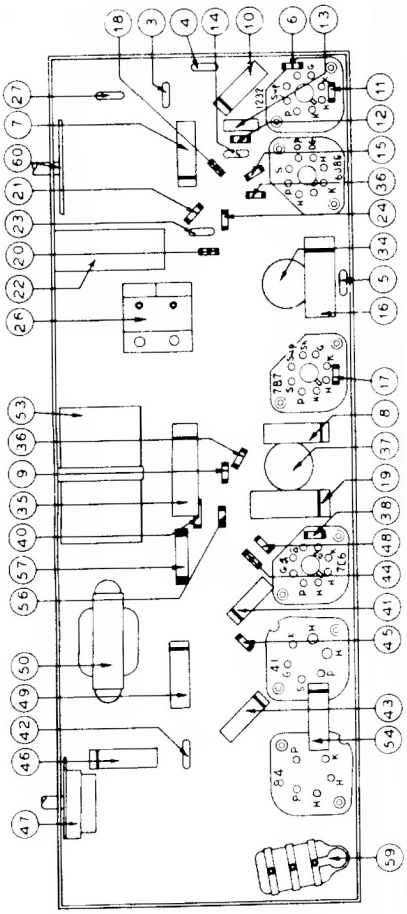

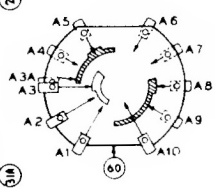

SWITCH SHOWN FROM REAR OF CHASSIS, BOTTOM VIEW, IN POSITION No.1, BROADCAST

SHADED RING AT FRONT OF SWITCH WAFER

UNSHADED RING AT REAR OF SWITCH WAFER

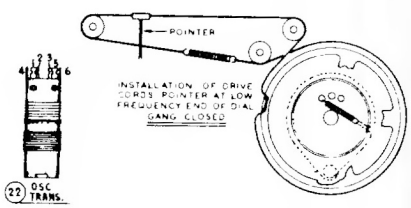

SCHE. No.	DESCRIPTION
1	Loop Assy. (Broadcast)
1A	Mica Cond. (250 mmfd.)
1B	Resistor (10,000 ohms, ½ watt)
2	Loop Assy. (Short Wave)
2A	Compensator (Part of S. W. Loop)
3	Mica Cond. (1000 mmfd.)
4	Mica Cond. (250 mmfd.)
5	Mica Cond. (5 mmfd.)
6	Resistor (1.0 meg., ½ watt)
7	Tubular Cond. (.05 mfd.)
8	Tubular Cond. (.05 mfd.)
9	Resistor (33,000 ohms, ½ watt)
10	Tubular Cond. (.05 mfd.)
11	Resistor (390 ohms, ½ watt)
12	Resistor (10,000 ohms, ½ watt)
13	R. F. Coupling Trans.
14	Mica Cond. (100 mmfd.)
15	Resistor (47,000 ohms, ½ watt)
16	Tubular Cond. (.2 mfd.)
17	Resistor (150 ohms, ½ watt)
18	Resistor (4700 ohms, ½ watt)
19	Tubular Cond. (.1 mfd.)
20	Resistor (470 ohms, ½ watt)
21	Resistor (4700 ohms, ½ watt)
22	Osc. Trans.
23	Mica Cond. (250 mmfd.)
24	Resistor (33,000 ohms, ½ watt)
25	Compensator (Single)
26	Compensator (2 section)
27	Mica Cond. (5300 mmfd.)
28	Push Button Switch
29	Padder Strip and Bracket Assy.
30	Coil No. 1 (540-1000 K.C.)
30A	Coil No. 2 (850-1100 K.C.)
30B	Coil No. 3 (740-1300 K.C.)
31	Coil No. 4 (900-1500 K.C.)
31A	Coil No. 5 (1100-1800 K.C.)
32	Silver Mica Cond. (370 mmfd.)
33	Silver Mica Cond. (370 mmfd.)
34	1st I. F. Trans.
35	Tubular Cond. (.25 mfd.)
36	Resistor (33,000 ohms, ½ watt)
38	Resistor (2.2 meg., ½ watt)
39	Volume Control (500,000 ohms)
40	Resistor (1000 ohms, ½ watt)
41	Tubular Cond. (.01 mfd.)
42	Mica Cond. (110 mmfd.)
43	Tubular Cond. (.01 mfd.)
44	Resistor (330,000 ohms, ½ watt)
45	Resistor (470,000 ohms, ½ watt)
46	Tubular Cond. (.003 mfd.)
47	Tone Control and On-Off Switch (.4 meg.)
48	Resistor (10.0 meg., ½ watt)
49	Tubular Cond. (.008 mfd.)
50	Output Trans.
51	Cone and Voice Coil Assy. (5pkr. Part No. 38-1480-3)
53	Electrolytic Cond. (4-4-8 mfd.)
54	Tubular Cond. (.05 mfd.)
55	Field Coil (Replace 5pkr. Part
56	Resistor (22 ohms, ½ watt)
57	Resistor (270 ohms, 1 watt)
58	Power Trans. (110 volt, 80
59	Line Cond. (.01-.01 mfd.)